$4.75

THE LOW & MEDIUM FREQUENCY RADIO

SCRAPBOOK

Dedicated to the Experimenter

RECEIVERS — ANTENNAS — LOOPS — COILS & COIL WINDING — THE NONLICENSED COMMUNICATION BANDS AND THE FCC RULES COVERING SAME

Printed in U.S.A.

KEN CORNELL, W2IMB

THE LOW AND MEDIUM FREQUENCY RADIO SCRAP-BOOK

Contents | Page

Forword	1
Introduction	2 to 4
Chapter 1. Receivers	5 to 18
Chapter 2. Coils and coil winding	19 to 41
Chapter 3. Antennas	42 to 48
Chapter 4. The nonlicensed communication bands	
160 to 190 kHz	49 to 78
510 to 1600 kHz	79 to 85
Addendum	86 to 90
Appendix. Federal Communications Commission Bulletin OCE 11, dated July 1973. Does my transmitter need a license? Extracts from part 15 -- RF Devices	91 to 105

Copyright
© Ken Cornell 1975

Contents, cont'd.

Circuits, diagrams and data

Figure	Item	Page
1a	Simple crystal set	13
1b	Tuned coupler crystal set	13
2	Regenerative detector	13
3	Regenerative receiver using cathode feed-back	14
3a	Switching to reverse cathode coil polarity	14
4	Grounded grid rf amplifier	14
5	One tube reflex receiver	15
6	Heterodyne logic	15
7	Direct conversion receiver front end	16
8	Tube type converter	17
9	Solid-state converter	18
10	Spider web coil form, 9 spoke	23
11	Spider web coil form, 17 spoke	23
12	Diamond weave coil form	24
13	Sickles coil winding pattern	24
14	Basket weave coil form	25
15a	Three coil holder with adjustable coupling	26
15b	Two coil holder with adjustable coupling	27
15c	Typical mounted duo-lateral wound coil	27
16	Wire turns per lineal inch table	28
17	Single layer coil winding data	28
Iron powder toroidal cores and winding data		29 to 32
18	Frequency range of duo-lateral wound coils	38
19	Coil winding machine assembly and details	39 to 41
20	Loop antenna construction and details	45 to 46
21	Loop antenna winding data	47
22 to 25,	Use of Goniometer with two loop antennas	48

Contents, circuits, diagrams and data, cont'd.

Figure	Item	Page
26	Crystal oscillator transmitter (160 to 190 kHz)	60
27	Wave meter/field strength meter	60
28	Remote reading field strength meter	61
29	VFO/RF amplifier transmitter for 160 to 190 kHz	61
30	Heterodyne exciter using a VXO for 160 to 190 kHz	62
31	CW, AM and DSB transmitter for 160 to 190 kHz	63
32	Antenna coupling circuits for 160 to 190 kHz	65
33	Receiver pi-network	66
34	One tube VFO transmitter for 160 to 190 kHz	67
Converting a BC-306 antenna tuning unit to a 160 to 190 kHz transmitter including Figs. 35 & 36		68 to 70
37	Simple transmit/receive switch	70
38	Wiring diagram of the "TU" series tuning units	72 to 74
39	Transmitter for the "TU" series tuning units	75
40	Compact oscillator/rf amplifier transmitter for 160 to 190 kHz and 510 to 1600 kHz	77 to 78
41	Oscillator/rf amplifier transmitter for 510 to 1600 kHz, using crystal or VFO control with tubes	80
42	Same transmitter using solid state	80
43	Bi-polar transistor transmitter for 510 to 1600 kHz	81
44	Antenna suggestions for 510 to 1600 kHz	82
45	Simple grid-dip meter	83
46	Antenna coupling suggestions for 510 to 1600 kHz	84
47	Noise filter for power mains	86
48	Audio filter	86
49	IC transmitter for 160 to 190 kHz	89

FORWORD

This low and medium frequency radio scrapbook is dedicated to a small segment of our radio frequency spectrum that basically covers 10 to 1600 kHz (30,000 to 187 meters).

Detailed information on receivers, antennas, etc. for these frequencies has been practically ignored in the various radio handbooks and periodicals for over 50 years.

For some reason, even the lowest frequency amateur radio band (160 meters) is not included in many of your expensive communications receivers, transmitters and transceivers.

This scrapbook is not written to impress the seasoned electronic or communications engineer, yet it might bring back some nostalgic remembrances to the old-timers as well as an introduction to a newcomer interested in radio communications.

The author was never considered a MAJOR in English, so will at this time apologize for many miss-spelled words and poor composition.

It is as non-technical as possible, and all circuits and data as described and illustrated, are straight-forward and proven by use in the radio shack.

Being published in loose-leaf form might be unique for a radio handbook, but it is done for the convenience of the owner....The staples are used to hold the pages together, but for those that wish, they can remove the staples and mount the contents in any type of standard loose-leaf binder....This will permit the reader to add copies of interesting articles that have or might appear in the various publications, as well as personal notes and sketches and possible future addendums.....In other words, it can be kept up to date, to suit your own personal interests.

The text contains facts, impressions and information that I have collected in over 40 years as an active and experimentally inclined radio amateur, as well as over four years in the preparation of same.

While concentrating on the lower frequencies, most of the information contained herein, can be applied to the lower frequency amateur radio bands.

To conclude this Forward, I have to thank my association with our small but dedicated group of low frequency experimenters.

Personal "73"

Ken Cornell, W2IMB

Ken

INTRODUCTION

At the close of World War I, when the ban on amateur radio operation was lifted, the "battle" for the low frequencies began.

The "buzz" of the spark gap and the "whine" of the rotary gap filled the air waves....It was difficult to separate the amateur from the commercial, and AM Broadcasting was just getting started....It was complete "bedlam".

In the early 20's, the old Department of Commerce, under Secretary Hoover (later President), was finally responsible for the basic frequency allotments, close to as we know them today.

The commercials were given 200 meters and up, and free public broadcasting (at the advertisers expense) was born.

The amateurs were given 200 meters and down, as they were considered practically worthless at the time....It is history of course, that the "Hams" proved that these frequencies were far from worthless.... It was not too long before relay networks covered the Nation and international DX became a fact....From here on in, the short waves ruled the experimenters attention....The spark gap gave way to the vacuum tube, and continuous wave, either keyed for code (CW) or modulated for voice (AM) was here to stay.

It is not the intent of this scrapbook to dwelve into the history of early radio, but for those that might be interested should read "200 Meters and Down"....This fine book was published by the ARRL in 1936 and the author was Clinton B. DeSoto....It is a "must" reading for any radio buff....Reprints are available from the American Radio Relay League, Inc., 225 Main Street, Newington, Ct. 06111 for $2.00 per copy.

I first became aware of low frequency radio activity some 4 years ago while living in Westfield, N.J.....I ran into a small group, via ham radio, that were experimenting with communications on the 160 to 190 kHz band....The FCC permits communication on this band, using any mode, and allows a plate input power of one watt and an antenna length of 50 feet....There are no license requirements.

I had several receivers that were capable of tuning this band, and it was not long before I was copying their CW signals in the 10 to 80 mile range....I wired up a simple variable frequency oscillator-power amplifier transmitter, and while I had no trouble getting the transmitter operational, I went through quite a frustrating period trying to get the antenna to radiate a signal out of my back yard.

To make a long story short, I finally got things "perking", and believe me when I say (at the age of 53);....I got just as big a "kick" with my first 185 kHz contact with a station in Colts Neck, N.J. (some 30 miles), as I did when a kid back in 1935 with my first "Ham" contact.

I recently have been experimenting and running tests on the 510 to 1600 kHz band. This range contains our AM broadcast band and the FCC permits nonlicensed use of same allowing 100 milliwatts input power and a 10 foot antenna....My best DX report at this time is the reception of my CW beacon at some 5 miles by a fellow experimenter using his car radio.

When describing our low frequency activities to other amateurs, I am always surprised at their interest in what we are doing. In almost all cases they wanted more information and complained about the lack of same in the various radio publications.

There have been some articles published on the 160 to 190 kHz band in the past, but with due respect to the authors (or publishers) of same, I feel that they were too brief and in one case, quite missleading. It was at this point that I decided to publish a small handbook on the 160 to 190 kHz band....It was published in August 1972 and contained my honest evaluation on band conditions, suggestions on receivers, transmitters (with circuits), antennas, calibrating instructions, etc.

Considering minimal advertising, I was quite pleased with its acceptance and the interest it generated....This led me to believe that a more detailed handbook covering the whole low frequency spectrum with expanded detailing on receivers and circuitry, antennas (including loops), coil winding and an expanded chapter on the 160 to 190 kHz band as well as the 510 to 1600 kHz band was in order....Thus this scrapbook.

An experimenter might ask;.....What can I accomplish by fooling around with the low frequencies ???....The answer is quite obvious !!!

What other country in this world will permit a person to operate a low power transmitter with an operable antenna for communications purposes, without a license ???

Some of your simplest type of receiving circuits are quite efficient on the low frequencies....Most any type of old or new vacuum tube or transistor can be used....Circuit components can be layed out on a board with the parts generously spaced, for convenience in wiring, as the wire lead lengths are not important.

Here is a chance to "home construct" the various fundamental receiving and transmitting circuits and learn the function that each part plays in the circuit, as well as each element in a vacuum tube or transistor.

Parts can be moved around on the board and mistakes easily rectified. After you get the "home-brew mess" working, you can now reassemble it into an attractive package....Some of the old receiving circuits using homemade coils and possibly some old parts (possibly a loop antenna), mounted in an attractive cabinet, can be a conversation piece for your den or living room as well as an operable instrument.

I hate to say it, but lets be honest with ourselves....As things stand today, most radio amateurs, experimenters and SWL's (myself included) have become "appliance operators"....It is actually cheaper to buy a sophisticated packaged rig today, than to design and build your own, assuming that you can find the necessary parts....Low frequency offers an experimenter the opportunity to learn or re-learn the basic fundamentals "breadboard style" and live or re-live the incomparable "wiff" of burning rosin on a hot soldering iron.

To conclude this introduction, I would like to point out, that here is a chance for beginners in the radio communications field, to be able to construct their own equipment and be able to put a wireless communication station on the air "legally", and be able to contact friends in a reasonable area....Here is your ideal proving ground to get code practice and actual "on the air experience"....I can't think of a better way to prepare yourself for an amateur license.

As mentioned in the Forward, we can consider that the low frequency spectrum runs from 1500 to 10 kHz....Since receiving equipment for the AM broadcast band is so common, we are primarily interested in the frequencies below 550 kHz.

Simple mathamatics will indicate that the primary frequency range (550 to 10 kHz) is only 540 kHz wide.

Keep this point in mind, because the average communications receiver usually covers some 500 kHz spread in each band position, and with the use of a converter, that will be described later, can play an important role in low frequency reception.

To the high frequency oriented ham or experimenter, 540 kHz might sound like a pretty thin slice of the radio spectrum....On two meters (144 mHz) for instance, a few pf of capacitance one way or the other will change the frequency of a tuned circuit this far....On the low frequencies, however, if you use a tuning capacitor of some 400 pf, you will need over a dozen coils in the average tuned circuit to cover this same range.

Let's review the various types of receivers and devices that can be used for low frequency reception....(I will not go into any detail on the various commercial and surplus receivers that are available, in this chapter, as these are covered later).

There are seven basic receiver circuits that are useable on the low frequencies:

1. Crystal (diode detection)
2. Regenerative detection
3. Tuned radio frequency (TRF)
4. Reflex
5. Superheterodyne
6. Direct conversion
7. Converter (an accessory)

#1 Crystal sets

The crystal set is one of your original diode detectors and is the simplest type of low frequency receiver....It requires no external source of power for operation, and can be quite effective in an urban or suburban area, with a suitable antenna, for the reception of local AM broadcast stations with earphone volume (high impedance earphones are a necessity and should be 2000 ohms or higher)....The fidelity of received signals is excellent and before the popularity of FM, these sets were used as high fidelity tuners for the hi-fi buffs.

Lack of selectivity is the major fault of a simple crystal set, and depending on your location, it is not uncommon to hear two or more stations at the same time and be unable to separate them....This can be remedied in most cases, by using a tuned coupler....Constructing a simple tuned coupler crystal set can be an interesting and inexpensive project, and at the same time will teach the builder something about tuned circuits and the coupling of same....See Figs. 1-a & 1-b.

Fig. 1-a is a diagram of your simplest type of crystal set....It is nothing more than a tuned circuit consisting of coil L-1 and a variable capacitor C-1 connected between the antenna and ground....The diode detector and the high impedance earphones are connected across the tuned circuit....It is NOT a selective receiver and you will be bothered with the problem of trying to separate the stronger stations.

Fig. 1-b if properly constructed, can be a very selective crystal set. Since coil L-1 is connected between the antenna and ground, it will have the signals that the antenna picks up in its field....Coil L-3 is wound and mounted on the same axis as coil L-1 but is located far enough away to provide minimal mutual coupling....Coil L-2 with its tuning capacitor C-1 should be a resonant circuit through the desired tuning range....When coil L-2 is inserted within the fields of coils L-1 and L-3, it acts as a tuned coupler and provides a very selective means for tuning desired stations....It should be noted that the looser the coupling, the more selective the receiver will be....The only function of coil L-3, is to couple this tuned received signal and pass it on to the diode detector that will change the radio frequency energy to audio frequency energy that the earphones will reproduce.

An interesting project for youngsters would be to duplicate what I call the "pill bottle receiver"....I use a plastic pill bottle that is about 1-1/4 inches in diameter and about 3-1/4 inches long (see your friendly druggist)....Wind two coils (in the same direction) at each end of the bottle with some 75 turns of number 30 wire....Keep as wide a space between these coils as possible, and secure the windings with coil dope....This takes care of coils L-1 and L-3.

Coil L-2 is now wound on a smaller pill bottle that is about 1 inch in diameter and some 2-1/2 inches long....Wind some 160 turns of #30 wire in the same direction as the other coils, and allow sufficient lead lengths on the ends of coil L-2 to reach a variable capacitor.

Connect an antenna and ground to coil L-1, and a diode in series with high imedance earphones across L-3, you might hear a jumble of BC stations weakly in the background....You now insert coil L-2 inside the bottle containg coils L-1 & L-3 and you will discover the effect of a tuned coupler in providing selective reception with a simple receiver....Depending on the size of your tuning capacitor C-1, you may have to prune coil L-2 (remove or add turns) to get the best coverage of the desired stations in your local area.

This simple receiver can also be used as a hi-fi tuner with your stereo amplifier....Replace the earphones with two phono jacks wired in parallel and use patch cords to your amplifier input....While not true stereo, the fidelity is excellent and the sound is quite pleasing to the ears.

#2 Regenerative detection

This is your old "blooper" receiver, but don't sell it short as it has its place in low frequency reception.

The word "regeneration" is normally used in receiving terminology. In this case it refers to an oscillating detector....The word "oscillation" is normally used in transmitting terminology.

A regenerative detector is very efficient on the low frequencies even though it uses only one tube....They have one major fault however; they can radiate a signal in the regenerative state that sounds like a squeal on another receiver in the neighborhood that is tuned to the same frequency....In other words, it would be like connecting an antenna to the hot side of the grid coil in your transmitter oscillator....This fault can be corrected by using a radio frequency amplifier between the antenna and the detector with loose coupling for the coils and reasonable shielding.

Regeneration in a detector circuit is normally accomplished by using a feedback coil in the plate circuit (commonly called a tickler coil). This coil is coupled to the grid coil and by varying the coupling or using other means to control the feedback, the detector can be thrown into an oscillating condition. It is at the threshold of oscillation (regeneration), that the tube is in its most sensitive receiving state. To provide a smooth control at this point is another problem with this type of receiver....The tickler coil is in a high impedance circuit and subject to stray capacitances such as your hands on the dial, etc. The circuit of a typical regenerative receiver using plate feedback is shown in Fig. 2.

Fig. 2 is typical of the regenerative detector type of receiver that was very popular in the early 1920's....Almost any type of triode vacuum tube can be used in this circuit and I have even substituted a Motorola HEP802 fet for the tube (at 9 to 12 volts) with good results, but with some loss in volume.

Coil L1 and variable capacitor C1 are resonant through the desired receiving range. The plate tickler coil, L2, is variably coupled to the grid coil, L1, and provides the necessary feedback to achieve regeneration....The turns ratio for coil L2 is about 25% to 30% of coil L1....It is most important that the polarity of the winding of L2 be proper to obtain regeneration....It may be necessary to reverse the wire connections to this coil to achieve proper operation.

If the antenna is connected directly to the grid coil it is recommended that capacitor CX be variable, and the minimum capacitance for a received signal be used to lessen radiation and improve selectivity.

Best results can be obtained by using an antenna coil, L3....It can be variably coupled to coil L1, and this will permit further improvement in selectivity and reduce radiation....The adjustable coil holders that are detailed in the coil winding chapter are a natural for this circuit (see Figs. 15a and 15b).

Regeneration in a detector, however, does not have to accomplished in the plate circuit.....My favorite regenerative detector obtains the necessary feedback in the cathode circuit of the tube, and it negates some of the short-comings of the plate feedback type....The feedback coil is nothing more than a one-turn loop of heavy wire that is in series with the cathode return to ground, and is mounted in such a manner as to provide a variable coupling to the cold end of the grid coil....We are now dealing with the feedback control in a low impedance circuit and stray capacitance effects are minimized....Without a doubt, it is the smoothest working regenerative receiver that I have ever

used....With a single tube, I have been able to copy experimenters CW signals on the 160 to 190 kHz band at distances of some 10 to 30 miles....The circuit is shown in Fig. 3.

Upon study, this circuit will show its similarity to the Hartley oscillator....Whereas the Hartley oscillator obtains its feedback by taping the tubes cathode return to ground into the grid coil, this circuit uses a separate one-turn loop of wire that is coupled to the grid coil in the cathode return to obtain the necessary feedback.

This scheme also offers the advantage, that only a two-prong plug-in coil is required for the grid circuit that would simplify coil changes in a wide range LF receiver.

Almost any type of vacuum tube will work in this circuit (even a triode and ignore the screen connections), but any type of tube that has its suppressor grid connected internally to the cathode, should not be used.....I have had excellent results using the older type tubes that have their grid connection at the top....Tubes such as the 6C6, 6D6, 57, 58 and 24A, etc. do a terrific job....It might be that this type of tube construction offers a better isolation between the grid and cathode elements, which will provide a means of obtaining a smoother control in feedback at the threshold of regeneration....It might be of interest to note, that I have used a Motorola HEP802 fet in this circuit with reasonable success.

Again, like any simple regenerative receiver when connected to an antenna, it can be a "signal generator", and it is suggested that a rf amplifier be used between the antenna and the detector, see Fig. 4.

#3 Tuned radio frequency

This receiver consists of two or more rf amplifiers, a detector and an audio amplifier. It can be an efficient low frequency receiver, particularly if a regenerative detector is used....Quite a few of the LF Military sets that are on the surplus market are of this design....For the home builder however, the number of tuned circuits, the tracking of the tuning capacitors, neutralization, etc., can tax the patience of even the most experienced builder.

It should be mentioned at this point that the intermediate frequency (if) amplifier in a superheterodyne receiver is nothing more than two or more stages of fixed tuned rf amplifiers.

#4 Reflex

The reflex receiver circuit is unique in the fact that one tube serves the purpose of two. The tube is used as a radio frequency amplifier as well as an audio frequency amplifier....It was a popular receiver with the home builder in the early days as the circuitry was simple, required few parts (that were common), and only one tube would provide speaker volume on local broadcast stations....Tubes and batteries were expensive in the 1920s, and in rural areas, hard to find.

Fig. 5 is a circuit of a simple one-tube battery-operated reflex receiver....Its operation can be made quite clear by tracing the

circuit....The tunable radio frequency energy is introduced to the grid of the amplifying tube from the antenna through the tuned circuit (T1 and C1). The tube will amplify this energy and pass it on to the diode detector through the radio frequency transformer T2. The detector will change this rf energy to audio energy by rectification; this audio energy is returned to the amplifying tube through the audio frequency transformer T3. The tube amplifies this audio energy and its output is fed to high-impedance earphones or a speaker.

My personal opinion of the reflex receiver is that while you get something for nothing as far as a tube and a few parts are concerned, the audio quality is inclined to be a little "mushy" and not equal to other designs....It could make an interesting project substituting a field-effect transistor for the vacuum tube.

#5 Superheterodyne

This receiver, while developed in the early 1920s, did not become popular with the public until years later....It was probably too sophisticated for the average home-brew artist, considering the cost of many tubes, parts and its battery consumption, just to listen to broadcast, when simpler and cheaper receivers did the same job....It was not until the depression of the 1930s that the "All American Five" ac-dc midget receiver found its way into the average household. These were a simple, basic superheterodyne and probably the first mass-produced receiver to come on the market.

These simple sets were a curse to the average radio amateur due to broadcast interference (BCI) and the simplest cure was to insert a 2000 ohm, 1/4 watt carbon resistor between the if output and the second detector....A story went around at the time that the manufacturers were approached by responsible amateur groups and asked them to add this resistor to future production. The answer came back; "Impossible, the cost is prohibitive" !!!

The word "super" is only window dressing as we are actually talking about a "heterodyne" receiver....A heterodyne is the result of beating two signals of different frequencies against each other to obtain a third signal at a frequency that is additive or subtractive of the two original signal frequencies....Anyone who has listened to a crowded amateur or short-wave broadcast band has heard the howls of the heterodynes....For example, if two radio carriers are separated by 1 kHz (1000 hertz), you will hear a 1000-hertz beat note coming out of the speaker....In this case your receiver provides the mixing function.

The heart of the superheterodyne receiver is the front end. This is the Conversion (converter) stage....From here on, the receiver is nothing more than fixed frequency rf amplification (if), detection and audio amplification....The converter stage contains a mixer and a local oscillator....The function of the mixer is two-fold: one is to receive the desired radio signal from the antenna or rf amplifier through proper tuned circuits, and the other is to receive a signal from the local oscillator....As mentioned above, these two signals are on different frequencies and the difference in frequency of these two frequencies (additive or subtractive) will appear in the plate of the mixer as a third frequency that will be amplified by the following

stages of the receiver. The intermediate-frequency amplifier is fixed tuned, so if at 455 kHz, which is a standard, this would mean that the local oscillator would have to tune 455 kHz above or below the received signal frequency (see Fig. 6 for heterodyne logic).

The fixed frequency intermediate-frequency amplifier offers an important feature....It will permit the use of frequency-selective filters such as the crystal and mechanical types. These filters are available that will shape the bandpass of the IF to almost any bandwidth that the user desires....Q multipliers and notch filters are also a helpful accessory for receiving comfort.

All communications receivers of the superheterodyne type contain a beat-frequency oscillator (bfo) that is connected so that it can inject its signal into the detector stage. In this case the bfo operates at or near the IF frequency and this signal will beat against the received signal at an audible frequency difference (like a heterodyne)....The use of a bfo remarkably increases the sensitivity of a receiver....Without the bfo turned on, it is possible to tune through a weak signal without detecting its presence, but with the bfo, when you tune through a weak signal, you will hear a beat note (whistle), and this is a reason why code (CW) and single side-band for voice is so popular with radio amateurs.

#6 Direct conversion

The direct-conversion receiver has recently become popular with the portable and QRP operating radio amateurs, as it is probably the simplest receiver circuit that can be used for the stable reception of CW, DSB and SSB signals.

In a simple receiver we it consists only of a product detector that is coupled to the antenna through appropriate tuned circuits and also contains a stable local oscillator that injects its signal into the product detector....This is all that is required for the rf portion and can be considered as the tuner....The output from this tuner is connected to a high-gain audio amplifier....This action can be compared to the detector in a superheterodyne receiver with its bfo on....All signals will have a beat-note, so if tuning in an AM station, you will have to zero-beat the station to comfortably copy same.

Articles on this type of receiver have appeared from time to time in the various amateur radio magazines, but the ones that I am aware of always use the diodes in a configuration that requires center-tapped coils....While this type of coil may be no problem to wind for the higher frequencies, a well balanced center tapped coil for the low frequencies could be well beyond the patience of the average experimenter.

I constructed a simple direct conversion receiver front end that is the utmost in simplicity. It used two simple single-ended coils (with capacitors) in the antenna input circuit and the product detector consists of two diodes back-to-back....The local oscillator is a HEP 802 fet and considering the few capacitors and resistors required, thats it....I feed the output of my tuner into a tape recorder mike

jack (in PA position) and on many occasions have copied experimenters signals on 160 to 190 kHz at 30 miles or so....See Fig. 7....Since the rf portion is tunable, any selective filter will have to be used in the audio stage.

The direct-conversion receiver offers another interesting project for the experimenter....Since the local oscillator works on or about the same frequency as the received signal, this local oscillator could be used to drive a buffer and a rf power amplifier for transmitting use. Proper switching for the antenna, etc. would be required. In fact, with a little more complicated switching, the audio amplifier could be used as a modulator for AM voice transmission....This arrangement would make the ultimate in a simple portable QRP (low power) Transceiver (there are some rigs on the market today that work on this basic principle).

#7 Converter

A converter is nothing more than the front end of a superheterodyne receiver. It contains a mixer, local oscillator and possibly an rf amplifier. On LF an rf amplifier is not necessary for general listening, but for serious work and Dxing they pay off with dividends.... Since a converter has no intermediate rf amplification, detection or audio system, it has to be used with an accessory receiver that will provide these vital functions.

A converter is normally used to extend the frequency coverage range of a receiver....Some communications receivers will tune as low as the broadcast band (550 to 1600 kHz). There are many however, that will not tune lower than the 80-meter amateur radio band (3500 to 4000 kHz)....This excludes the amateur 160 meter band (that is becoming very popular) as well as the broadcast band....This is where a converter can play an important role for LF listening. In other words, you can use the quality features that are contained in a good communications receiver and extend its reception range into LF with a simple converter....See Figs. 8 and 9.

Since the converter works on the heterodyne principle, tunable reception through a desired frequency range can be accomplished in two ways: (see heterodyne logic Fig. 6)

A. The converter can have a tunable local oscillator. The mixer output can be set to feed a receiver at any desired frequency....Lets use a broadcast set as an example....The set can be tuned to a clear frequency, say 1500 kHz....In this case the converters local oscillator will have to tune from 1510 to 2000 kHz or 1490 to 1000 kHz if you wish to receive the 10 to 500 kHz range.

B. The other scheme is to have the local oscillator fixed tuned and this is normally accomplished with crystal control....This means that to cover a desired frequency range, the companion receiver has to do the tuning....An example of this would be to use an amateur radio receiver tuned to the 80-meter band (3500 to 4000 kHz)....If you use a 3500 kHz crystal in the local oscillator, you will now tune in 10 kHz signals at 3510 on the dial, 100 kHz at 3600, 200 kHz at 3700, etc., 500 kHz at 4000....A transistor converter of this design was described in the December, 1968 issue of QST magazine.

Regardless of which scheme is used, the tuned circuits for the rf amplifier and the mixer input must be constantly peaked to be resonant at the desired receiving frequency....This will require large variable tuning capacitors as well as plug-in or switchable coils in order to tune through the medium and low frequency radio spectrum.

There is one important point to remember when using a converter: This is the fact that that the receiver is going to try to do the job that it was designed to do....Receive signals on its fundamental frequency as well as those that are fed to it through the converter....To negate fundamental feed-through, excellent shielding and grounding of the converter, as well as the use of coaxial cable (the shorter, the better) between the converter and the receiver is a must....Most communications receivers are well shielded, as is the average car radio, but beware of the plastic-case broadcast set using a loop or ferrite core type of antenna.

The small transistor broadcast sets can be used however, as an excellent portable LF receiver, using a transistor type of converter, Fig. 9....In this case the broadcast set is mounted in a shielded box with the converter, and in such a manner that the mixer output coil can be mutually coupled to the ferrite core antenna....If this arrangement is not desireable, a link coupling between the mixer output coil and the receivers antenna coil can also be used....This type of receiver is most helpful in seeking out radio frequency interference (RFI) noise sources that plague the lower frequencies.

General notes

As mentioned earlier, quite a few coils are required to cover the low and medium frequency radio spectrum. In the various circuits, as detailed, I have not gone into any detail on the coil size and value of the tuning capacitor for any given frequency, as this information will be covered in the next chapter on coils and coil winding....I also have not gone into any detail on audio amplifiers as these are so well covered in many handbooks, and can be purchased as a packaged unit to suit nearly any requirement at very reasonable prices.

One of the headaches in bread-boarding is the tube socket. The average flanged chassis-mount type socket has to be set on stand-off studs when secured to the board. The lugs in many types are hard to reach to make a good solder connection as well as problems with short circuits, particularly with the miniature types....Pomona manufactures sockets for standard tube types that have a large circular flat flange at the bottom with screw holes that are ideal for breadboarding. The tube pin connections are brought out to well spaced solder lugs around the periphery of the socket....For a quickie experimental circuit I use double-faced masking tape to secure the socket to the board.

Amphenol manufactures an octal socket designed for plug-in relays that can also be used. These contain two strips of four machine screws, in barrier-strip fashion on each side of the socket. Solder connections are not required....The cost however, is substantially higher than the Pomona type....I suggest that you review these sockets and possibly other tpes that are adaptive to bread-boarding with a salesman at your favorite radio emporium.

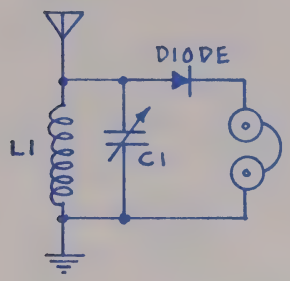

Fig. 1a
Simple crystal set

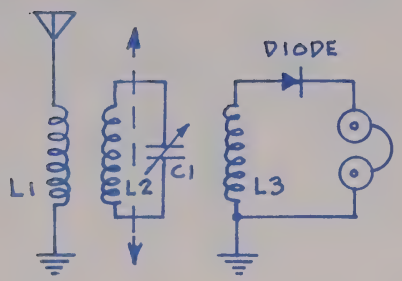

Fig. 1b
Tuned coupler crystal set

See text for descriptions of circuits

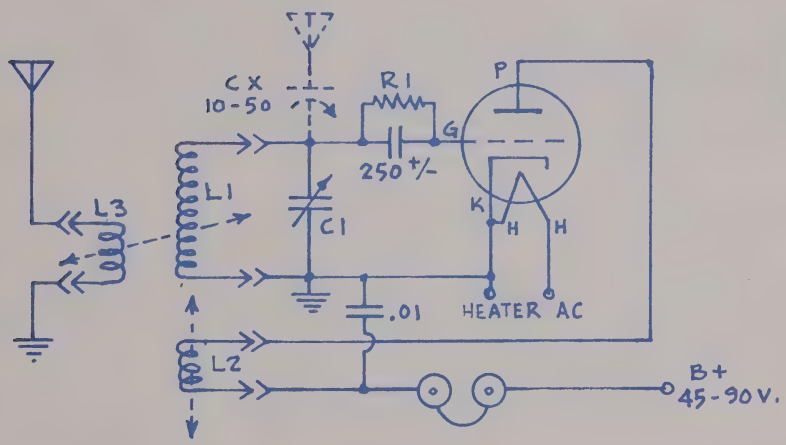

Fig. 2
Regenerative detector

See text for description.

The proper value for the grid resistor R1 can be anything between 1 and 10 megohms....Experiment with this value to obtain best operation to suit your tube type.

WARNING:- This circuit shows the earphones in the B+ lead and this can be a SHOCK HAZARD....It is suggested that a suitable output transformer that will match the impedances of the tube plate to the earphones be used.

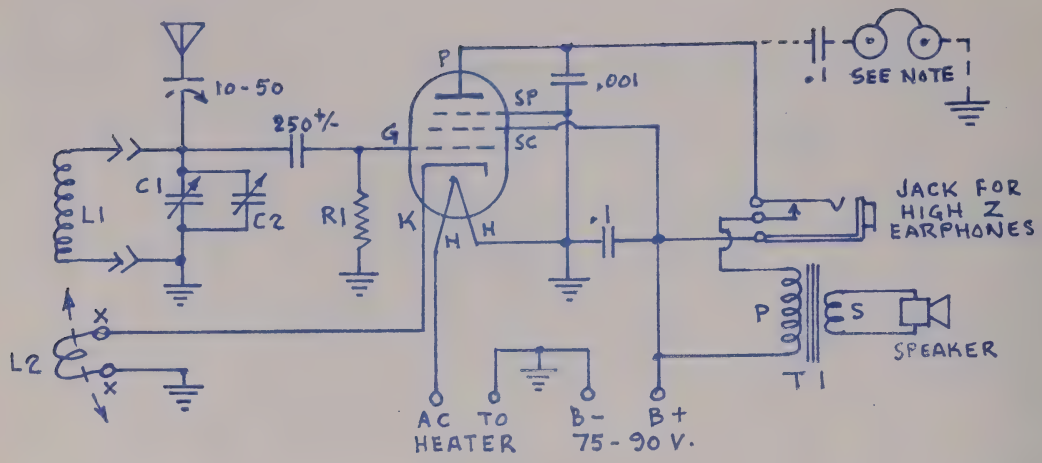

Fig. 3

Regenerative receiver using cathode feed-back

Coil L2 is a single turn loop of heavy wire 2 to 3 inches in diameter that must have a smooth manually adjusted, variable coupling to coil L1 to permit proper control on feed-back at the threshold of regeneration....If regeneration can not be obtained, reverse the wires to coil L2 at points X-X....A DPDT switch can be added in the cathode circuit for convenience to accomplish this function, See Fig. 3a.

Experiment with the value of R1 (between 1 and 10 megohms) to obtain best performance.

NOTE:- The earphones are located in the B+ lead and can offer a potential SHOCK HAZARD....An alternate circuit is shown connecting the earphones off the plate circuit to ground through a coupling capacitor....In this case the jack can be eliminated and the speaker disconnected when the earphones are used.

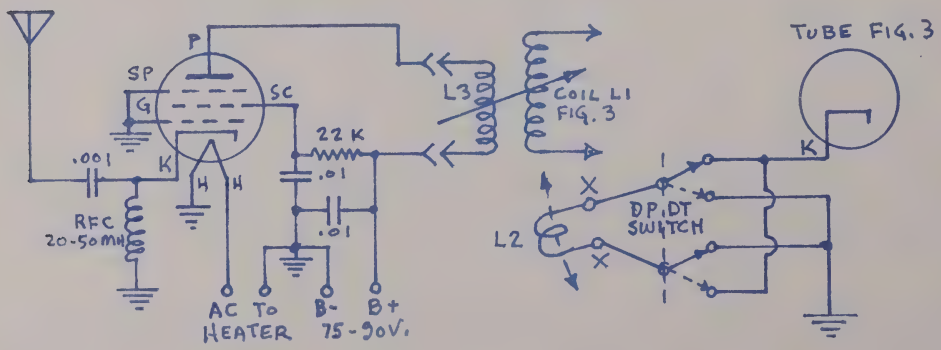

Fig. 4

Fig. 3a

Grounded grid rf amplifier and cathode coil polarity switch

Do not use a tube in the rf amplifier that has the suppressor grid internally connected to the cathode.

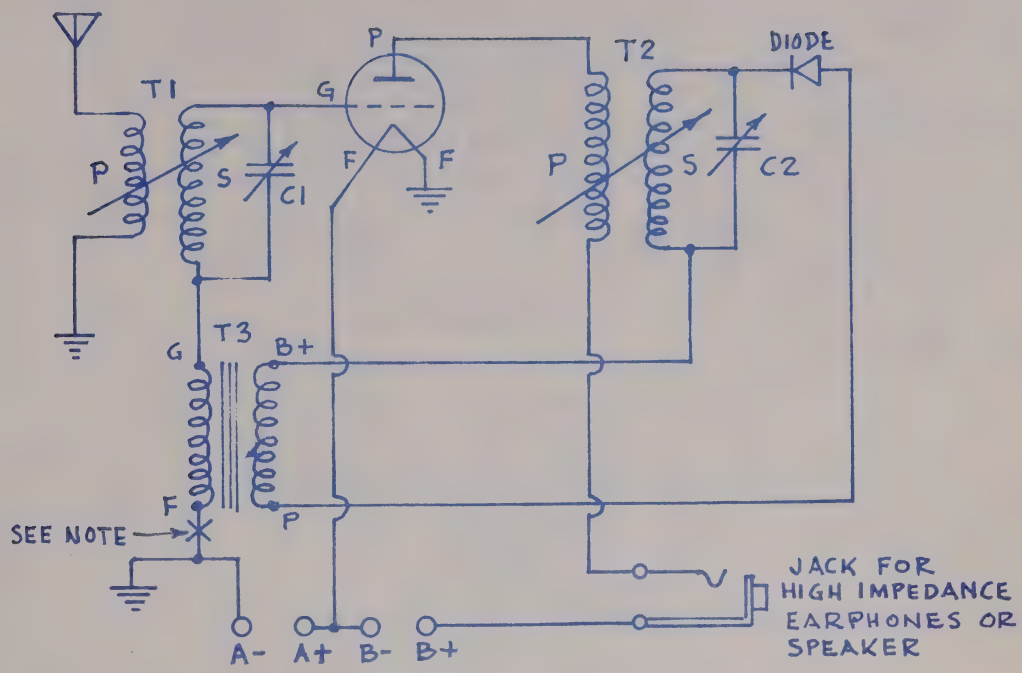

Fig. 5

One tube Reflex receiver

T1 and T2 are rf transformers (coupled coils). The secondarys (S) are tuned to resonate through the desired frequency range with the variable capacitors C1 and C2.

T3 is a plate to grid interstage audio transformer.

If an ac heater type tube is used in lieu of the filament type, the grounded side of the filament can be considered the cathode and B- should then be grounded.

Note:- For best performance, a grid bias battery can be inserted at point "X"....This could be anything from 3 to 9 volts depending on the tube type....the negative side goes to the grid in any case.

Beware of SHOCK HAZARD with the earphone jack in the B+ lead.

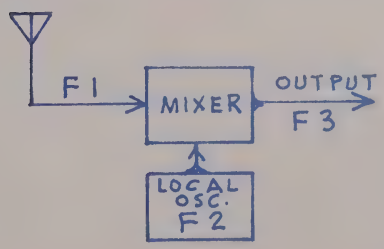

F1= Received signal frequency
F2= Local oscillator frequency

Then F3= F1 plus or minus F2

Or, F1 plus or minus F3= F2

Fig. 6

Heterodyne logic

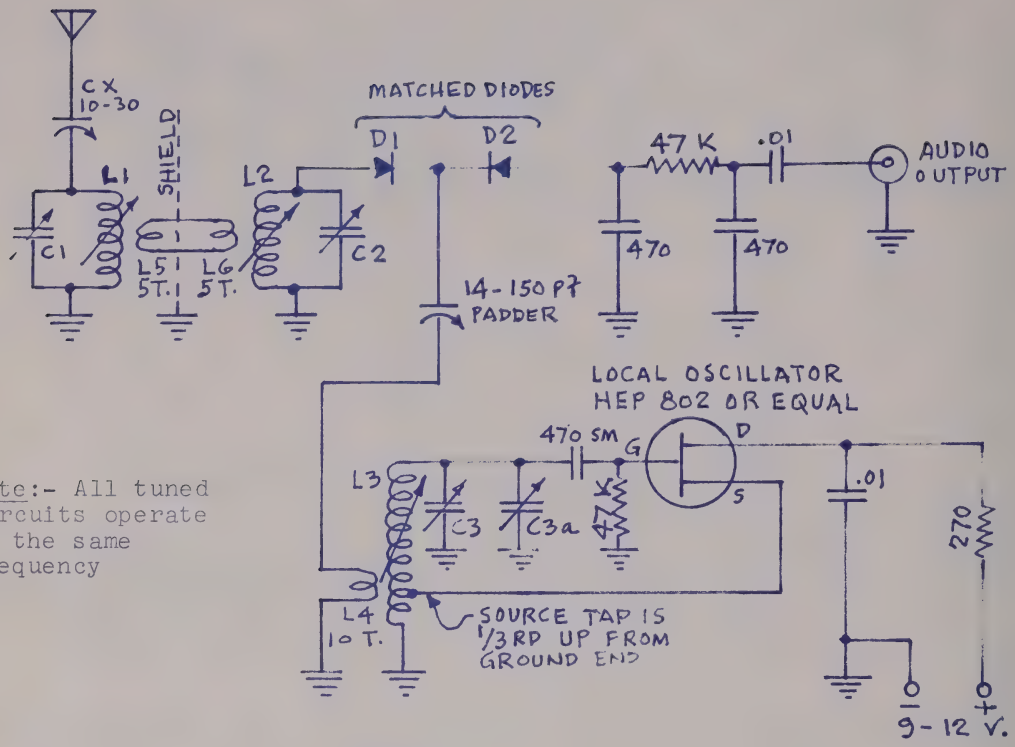

Note:- All tuned circuits operate on the same frequency

Fig. 7

Simple direct conversion receiver front end

The "heart" of this tuner is a stable and smooth tuning local oscillator....While simple oscillators can be quite stable on the low frequencies, good quality parts that are well mounted is a must. Tuned circuits L1/C1 and L2/C2 should be very selective and the coils high Q. If not well shielded, you may have strong local station feed-through....A wave trap in the antenna lead will negate this problem.

Tuning is accomplished with the local oscillator. Capacitor C3 (high value) is used for band-set, and C3a (low value) for fine tuning.

The audio output from this tuner is low, so a high gain audio amplifier is required.

Due to the number of coils required and shielding, this type of receiver is not recommended for general medium and low frequency coverage....It can however, be an effective and simple receiver through a frequency range that can be covered with one set of coils

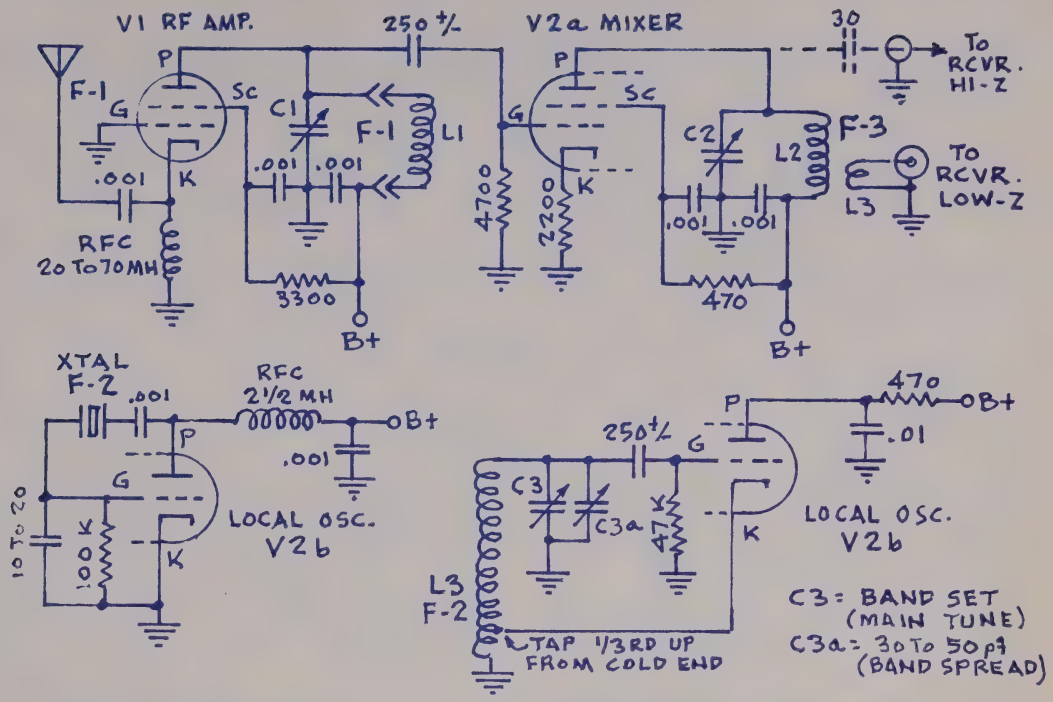

Crystal controlled local oscillator

Tunable local oscillator

Fig. 8

This converter circuit is suggested for an important reason...Only one coil (L1) has to be changed to provide full coverage of the low and medium frequency spectrum.

It uses a grounded grid rf amplifier and any tube type recommended for this service can be used (do not use a tube that has the supressor grid internally connected to the cathode)....Tuned circuit L1/C1 has to be constantly peaked to be resonant at the received signal frequency for best performance....Coil L1 can be a plug-in type, or a series of coils used with a switch to select the tuning range....The larger the capacity that C1 is, the fewer coils (L1) will require.

The converter uses pentode-triode tube type, such as a 6U8, using the pentode section as the mixer and the triode section as the local oscillator.

The mixer output tuned circuit L2/C2 (F-3) should be a resonant at the frequency that you have the accessory receiver tuned to....Two methods of coupling the mixer output to the receiver are shown...Most modern communication receivers have a low impedance input, therefor the link coupling method is suggested....Coil L3 is a few turns of insulated wire wrapped around the cold end of coil L2 (experiment with the number of turns for best performance)....For some of the older receivers, the capacity coupling method may be preferred.

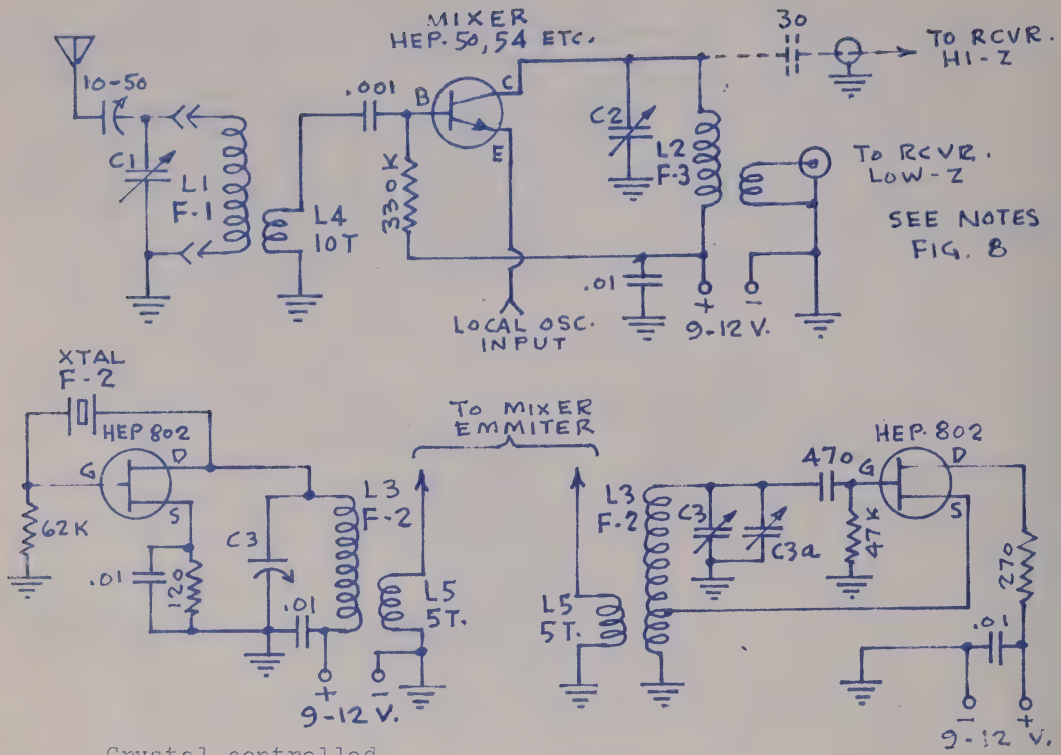

Crystal controlled
local oscillator

Tunable local oscillator

Fig. 9

This circuit illustrates a simple two transistor converter. The mixer can be any NPN type suitable for rf service, and the local oscillator uses a Motorola HEP-802 or equal type of FET.

All of the tuned circuits L1/C1, L2/C2 and L3/C3 are the same as noted for the tube type converter Fig. 8....In this case however, if coil L1 is a plug-in type, the mixer base pick-up coil L4 should be mounted in such a manner, that mutual coupling is provided....If switchable coils are used for L1, then a two gang switch should be provided, one section for coils L1, and the other section for coil L4.

The converter output connection to the receiver, as noted in Fig. 8, can be a low or high impedance connection.

The solid state devices as noted for this circuit, were the types used by the author, and other equivilant types should provide satisfactory performance.

Chapter 2, Coils and coil winding

Coils need no introduction to the radio experimenter, as there are few radio circuits in which they are not required in one form or another....This chapter will deal with coils used for the radio frequency spectrum.

We will review the various types that are useable on the medium and low frequencies and explain in detail, their types of windings and differences.

The first part of this chapter will describe the coil types that are adaptable to hand winding and describe the type of winding forms that are required for same.

The second portion of this chapter will describe the simple and inexpensive types of machines, and the use of same, that can be used for winding your more sophisticated types of coils.

Let us review the various types of coils that are useable on the low and medium frequency radio spectrum, and possibly I will stir up some nostalgic rememberances in a few "old timers".

1. Solenoid
2. Pie wound
3. Duo-lateral (Honeycomb)
4. Spider web
5. Diamond weave
6. Basket weave
7. Toroid
8. Variometer
9. Goniometer

Note:- The last two types can not be considered a basic coil type, but they do use coils in a unique arrangement and I feel that a description of same should be included herein.

1. Solenoid

This is your most common winding. It consists simply of a continuous winding of wire, normally on a cylindrical form, and can be close spaced or wide spaced to suit the application....See Fig. 16 for single layer coil winding data.

2. Pie wound

This type of coil consists of multiple layers of solenoid windings layed upon each other. The pie winding is normally of narrow width and with each layer of winding running alternately opposite to each other. The pies are normally wound on a small diameter form, and quite often contain a number of pies that are wired in series with each other to achieve the necessary inductance....Your typical 2-1/2 MH rf choke is an example of this type of configuration.

Note:- The first two types of coils are often wound on a hollow form that contains a ferrite core....This core is normally mounted with a screw thread that permits manual adjustment of its position within the field of the coil to permit a wide adjustable varience in its tuning.

3. Duo-lateral

This coil was known to the old-timers as the "honeycomb". While they are basically wound in the same fashion as a single pie, this is where the similarity ends....These coils are machine wound on about a 1-1/4" diameter form with a winding width of some 3/4"....Each layer of winding has a space between each wire and due to the pitch of the wire in each layer being opposite to each other, the finished coil when viewed from the outside, has an open diamond shaped pattern visable through the depth of the coil....These coils are attached to an insulating block that contains a pair of bananna plugs (sometimes alternate male and female, to insure proper polarity)....These can be considered one of your first commercially produced plug-in coils....See Figs. 15c and 18 for data.

Several types of socket arrangements are used to accept these coils, either two or three, side-by-side....In the two coil holder, one coil was stationary and the other coil, by a panel adjustment, could be manually moved to provide proper coupling to the fixed coil....In the three coil holder, the center coil is fixed and the two side coils can be adjusted from the panel in the same manner.

Simple homemade coil holders for either two or three coils are detailed in Figs. 15a and 15b.

4. Spider web

This coil is wound on a form that is cut from a piece of stiff cardboard or any other type of stiff insulating sheet material....The outside of the form is circular and an odd number of slots that will accept the wire are cut from the outside of the form to a diameter on the inside of the form....Figs. 10 and 11 illustrate two typical full size winding forms....Winding the coil is easy. You start at the inside and go over one spoke and under the next, etc.

While this type of coil is efficient and easy to make, it is not practical for full low frequency coverage due to its size (outer diameter). Consult your wire turns per inch table, Fig. 16.

5. Diamond weave

This coil is wound in the same fashion as the spider web, but the form is different and is removed after the coil is finished....The form consists of a wood disc that becomes the hub, and the perifery of this hub is drilled to accept an odd number of pegs (dowels) that are removeable. The diameter of the hub and its thickness will depend on the number of pegs desired and their diameter.

Fig. 12 illustrates a typical full size form.....Winding starts from the inside over one peg, under the next, etc.

The finished coil will end up being self-supported by its own winding pattern, since the pegs and the hub are removed....This means that the finished coil has to be well secured with coil dope before the form is removed....Coil dope should be applied at the intersection of the wires between the pegs....Take extreme care that the dope does not cement the wires to the hub or the pegs....I suggest that before you start

winding the coil that you secure strips of wax paper across the face of the hub between the pegs, and fasten same to the sides of the hub with gummed tape. This will prevent cementing the inner windings to the hub and will assist sliding the finished coil off same after the pegs are removed.

I also suggest that the dowel pegs be sanded smooth and be coated with wax (rub same over an old candle butt)....Sand paper can also be used to provide a slight taper to the dowel end to provide a neat fit to hole in the hub.

There is another type of diamond weave coil that I have to describe.... If you can call a coil "beautiful", this is it !!!...It was known as a "Sickles coil"....It is wound on a circular wood hub much larger in diameter than the coil just described....Instead of one row of fairly large diameter pegs, this form contains two rows of pins (or brads) that are located directly opposite from each other around the perifery of the hub, and again of odd number....A suggested form would be a wood disc, some 3-1/2" in diameter and 1" thick....This hub would contain two rows of 25 brads around the perifery, evenly spaced. The spacing between the two rows should be 5/8" to 3/4"....The winding again starts from the inside, but in this case, the winding pattern is over two pins, back in one, over two and back in one, etc.

This coil is very tender until it has been secured with coil dope and the same cautions as to avoid cementing the wires to the pins and hub as mentioned above should be observed....Fig. 13 illustrates the winding pattern.

6. Basket weave

This configuration while similar in winding fashion to the diamond weave coil, is actually a modification of the solenoid type, yet ends up as an air-wound low loss and very efficient coil type. (Quite a few experimenters use this type of coil as a base loading coil for their 50 foot vertical antenna on 160 to 190 kHz).

The form for this coil is a baseboard of sufficient size and thickness that can be drilled to accept a circle of removeable dowels, again of odd number....The diameter of the dowel circle will determine the diameter of the coil, and the diameter of the dowels, the thicknes of the coil layer....Winding the coil starts at the bottom, over one dowel, under the next, etc. After the coil is wound, the same precautions for applying coil dope and securing the coil, before removing the dowels, as mentioned before should be observed....Fig. 14 is a typical form.

7. Toroid

A toroid is a small doughnut shaped piece of various ferrite materials that can be used as a core (form) for winding a coil. They are small considering the inductance obtainable, efficient and very high "Q". Since the field of the coil is contained within the inside of the ring, they are not as subject to outside electro-magnetic effects as your more common types of coils.

To wind the coil, you have to determine the number of turns required

and multiply this by the circumference of the core....Allow sufficient lead lengths at each end, and a little more for a safety margin....It is always easier to remove turns than to add them....This wire is now wound on a "bobbin" end over end....The bobbin is nothing more than a "popsickle" stick or a strip of stiff cardboard that has a "V" notch at each end that will contain the wire....Diameter-wise, the "bobbin" with its contained wire, has to be narrow enough to pass through the eye of the toroid....Winding the coil is like threading the eye of a large needle.....through the hole in the toroid, around and around, until the winding is complete.

Data on toroid coils is not easy to find in the various handbooks, as to core material, size of wire, and number of turns, etc. for various frequencies (except in the case of a particular project).

Through the courtesy of Amidon Associates, data concerning toroid coils is included at the end of this chapter.

8. Variometer

This device consists of two coils of different diameters. The smaller coil is mounted inside the larger coil. The larger coil is normally mounted in a stationary manner, and the smaller coil is of such size and configuration that it can be manually rotated within the field of the larger coil by 180 degrees....The two coils are normally wired in series, therefor the position of the rotary coil within the field of the stationary coil will cause the two windings to "add" or "buck" and a very wide inductance range can be obtained.

In some of the old regenerative receiver circuits, this type of device was used with seperate windings.....The rotary coil was used as the "tickler" coil and this scheme provided a very smooth feed-back control

9. Goniometer

A goniometer contains two sets of split coils that are mounted in a shielded box, and are positioned at right angles to each other. Each one of these coils is connected to its own large loop antenna. Each loop is also fixed mounted at right angles to each other. Each coil now provides a "mirror image" of its respective loop inside the goniometer box....The gap between these coils should provide a tight clearance for a third coil, that is connected to the receiver.

Loop antennas exhibit a broad figure 8 gain pattern with a sharp null off their sides. Therefor, by manually rotating the receiver pick-up coil witin the fields of the loop coils, the directional characteristics of the loops can be used as a receiving aid to favor a wanted signal or null out an interfering signal or noise source.

Further details and some suggested experimental circuits for this system are covered in the antenna chapter.

See Page 44 and Figs, 22 to 25.

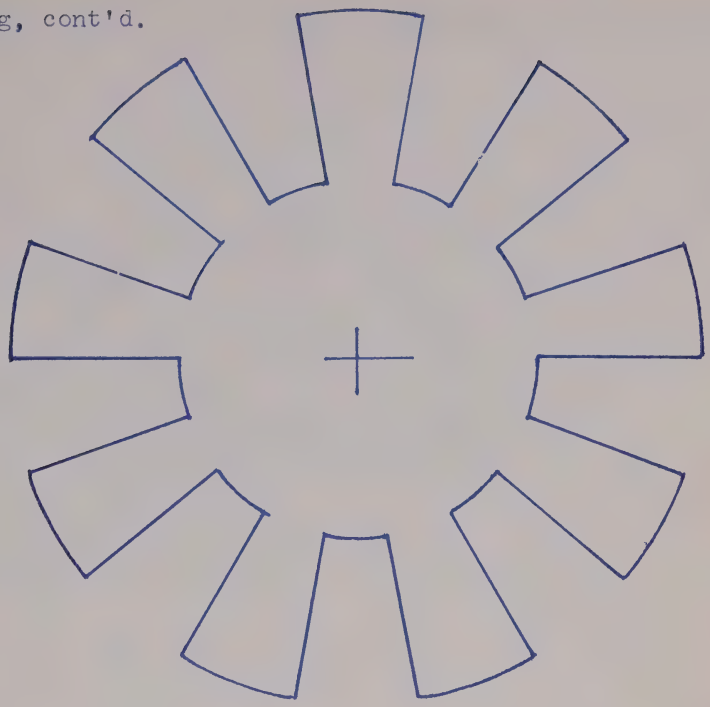

Fig. 10

9 Spoke
Spider web form
Full size

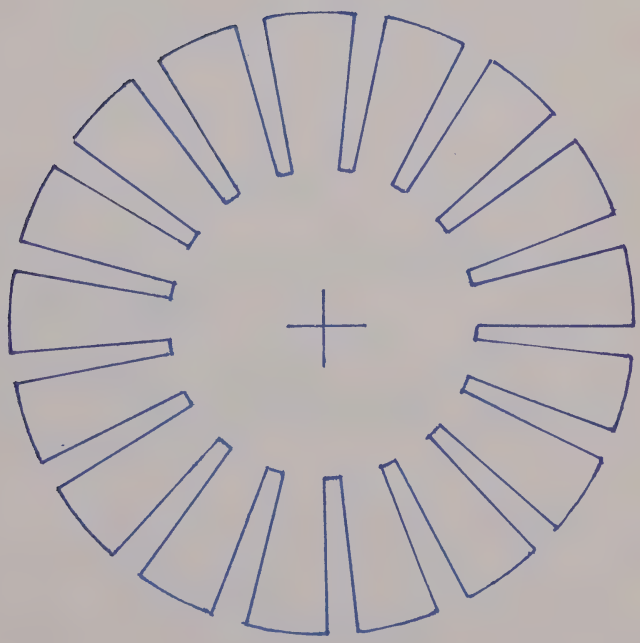

Fig. 11

17 Spoke
Spider web form
Full size

Fig. 10 was a popular form for the over one, under one winding pattern, and Fig. 11 for the over three, under three pattern.

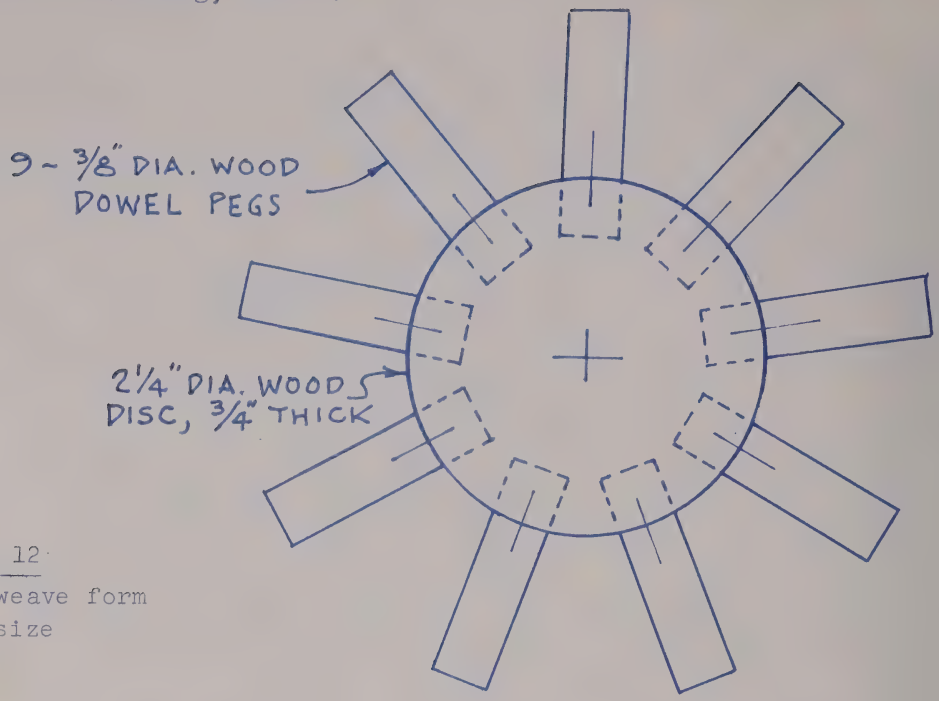

Fig. 12
Diamond weave form
Full size

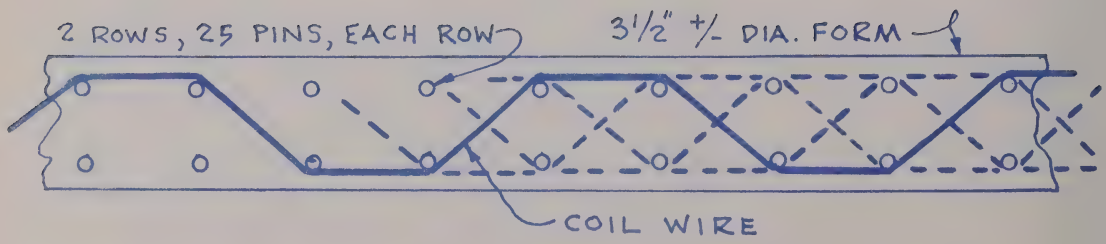

Fig. 13

This is an expanded view of the perifery of the "Sickles type" of coil form. The solid line indicates the winding pattern, and the dotted lines indicate the "lay" of the wire as winding progresses.

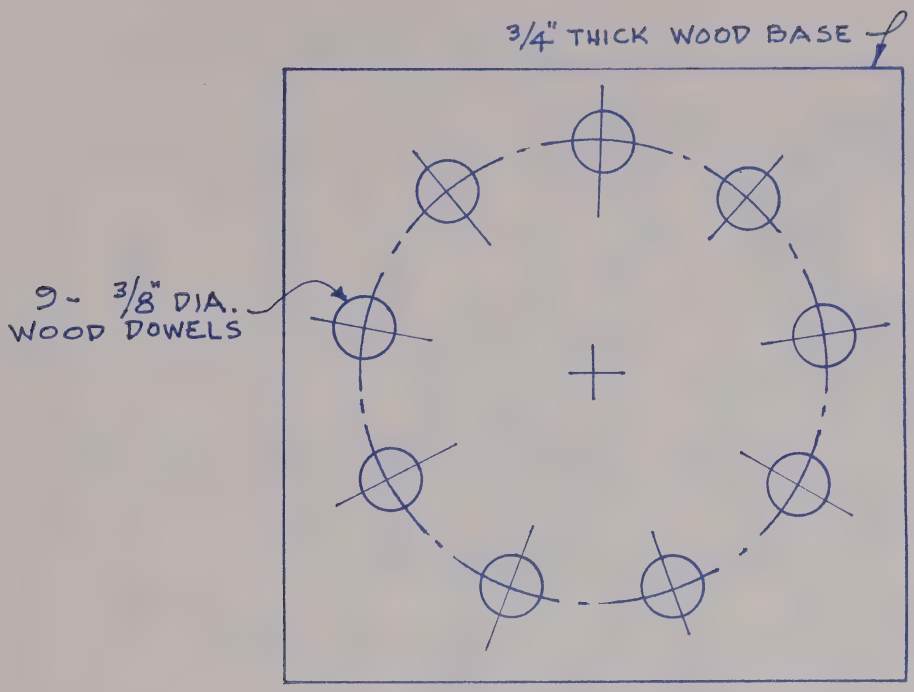

Fig. 14

The basket weave coil is wound in an exaggerated solenoid fashion. The length of the removeable dowel pegs should be sufficient to contain the desired number of turns....Consult Figs. 16 and 17, wire turns per lineal inch and single layer coil winding data....Due to the looser type of winding, add about 25% more turns, as it is easier to remove turns than to add them.

When winding this type of coil, particularly with a large number of turns, DO NOT use too much tension on the wire while winding. If you do, this will tend to bend the dowels in and you will end up with a coil that has a conical taper. Just guide the wire lay easy around the pegs, as we are only looking for the over and under pattern. The coil dope will secure the finished coil.

This type of coil, due to its low loss, is very popular with the 160 to 190 kHz band experimenters, as a base loading coil for their 50 foot vertical antennas....Some experimenters mount their transmitter alongside the top of the coil and and inductively couple the tank coil within the loading coil.

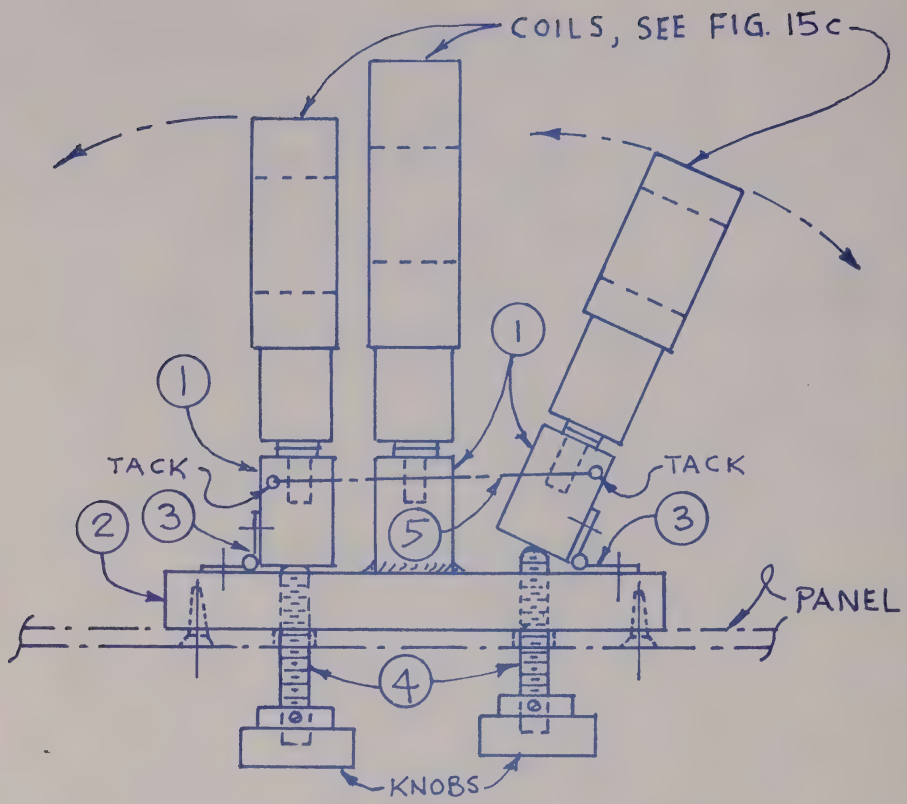

Fig. 15a, Adjustable coupling, three coil holder

1. Coil holder. Wood block 5/8" thick x 1-1/4" wide x 1" high. Center piece is cemented to the base #2 and side pieces are hinge mounted to same. Drill and tap blocks for bananna plug sockets.

2. Wood strip 1/2" thick x 1-1/2" wide x 4-1/2" long. Drill and tap (1/4"-20 NC) for coil adjusting threaded rods #4.

3. Small butt hinges (Hardware Store item).

4. 1/4"-20 threaded rods (Hardware Store item). Length to suit mounting arrangement. File one end smooth and round.

5. Rubber band streched between tacks in the two outer coil holders.

Note:- 3/4" spacing is standard for bananna plugs. Make an accurate metal template, and use it for drilling all holes.

Eliminate one of the side coils for a two coil holder.

Use DRY wood and apply several coats of "Q" dope.

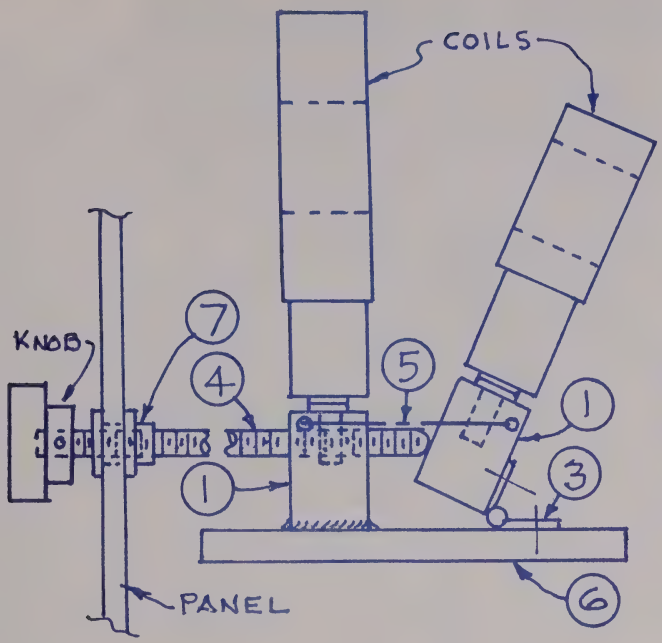

Fig. 15b
Adjustable coupling, two coil holder

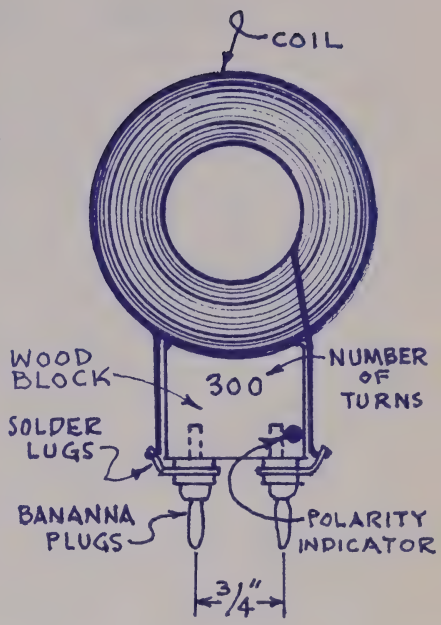

Fig. 15c
Typical mounted
Duo-lateral coil

All items for Fig. 15b are the same as specified for Fig. 15a, except as follows:-

6. Baseboard to suit mounting arrangement.

7. Standard 1/4" panel bushing.

For this arrangement, the fixed coil holder block is drilled and tapped for the 1/4"-20 threaded rod....Be sure to clear the bananna plug sockets when drilling this hole.

This coil holder can can be used with the three coil holder Fig. 15a to provide right angle mounting of the coil axis's to minimize inter-coupling as in a case of a regenerative detector with a tunable rf amplifier.

While these holders are ideal for the duo-lateral type, they can also be used for the spider web, diamond weave, Sickles type and solenoids up to some 1-1/2" long.

Fig. 15c illustrates a typically mounted Duo-lateral coil. It also can be used for the four types mentioned above.

Fig. 16

Wire turns per lineal inch

B. & S. GAUGE	KIND OF INSULATION						
	DCC	SCC	DSC	SSC	ENAMEL	ENAMEL AND SCC	ENAMEL AND SSC
14	13.7	14.6	14.7	15.0	15.2	14.2	14.7
15	15.0	16.2	16.4	17.0	17.0	15.8	16.5
16	16.7	18.0	18.2	19.0	18.7	17.6	18.4
17	18.5	20.0	20.0	21.2	21.4	19.5	20.5
18	19.6	22.3	22.3	23.6	24.0	21.7	22.9
19	22.5	25.0	25.2	27.0	27.2	24.2	25.8
20	24.5	27.5	27.5	29.5	30.1	26.5	28.4
21	27.5	30.8	30.8	32.8	33.6	29.6	31.5
22	30.0	34.0	34.0	36.6	37.7	32.7	35.0
23	32.7	37.5	37.5	40.7	42.3	36.1	39.0
24	35.5	41.5	41.5	45.3	47.2	39.7	43.1
25	38.5	45.7	45.7	50.3	52.9	43.7	47.9
26	41.8	50.2	50.2	55.7	59.0	47.8	52.8
27	45.0	55.0	55.0	61.7	65.8	52.1	58.1
28	48.5	60.0	60.0	68.3	73.9	57.0	64.4
29	52.0	65.5	65.5	75.4	82.2	61.9	70.6
30	55.5	71.3	71.3	83.1	92.3	67.4	77.9
31	60.0	77.3	77.3	91.6	103.0	72.8	85.3
32	62.7	83.7	83.7	101.0	116.0	79.1	93.9
33	66.3	90.3	90.3	110.0	130.0	85.6	103.0
34	70.0	97.0	97.0	120.0	145.0	91.7	112.0
35	73.4	104.0	104.0	131.0	164.0	98.8	123.0
36	77.0	111.0	111.0	143.0	182.0	105.0	133.0
37	80.3	126.0	126.0	155.0	206.0	113.0	146.0
38	83.5	133.0	133.0	168.0	235.0	120.0	157.0
39	89.7	140.0	140.0	181.0	261.0	128.0	172.0

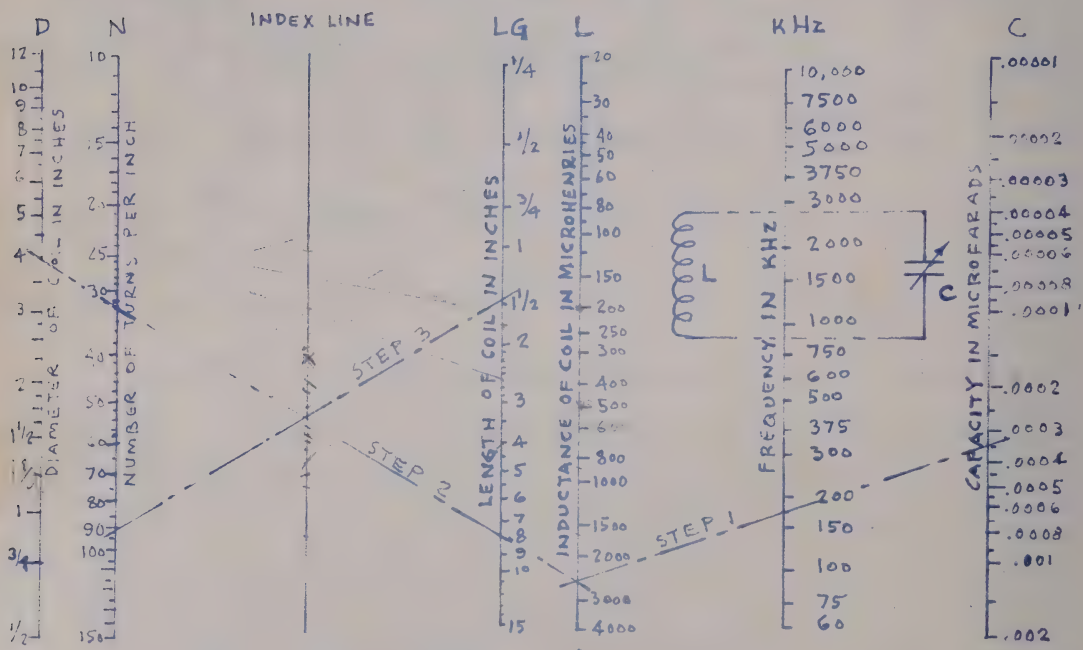

Fig. 17, Single layer coil winding data

Step 1. Draw a line from capacitor size through frequency and this will indicate the coil inductance required.
Step 2. Draw a line from the inductance to the desired coil diameter.
Step 3. Draw a line from number of turns per inch (wire size) and intersect step 2 line at the index line. This will give the length of coil winding required.

The example shown, indicates that a coil for 175 kHz using a 350 pf capacitor would need about a 2.7 mh inductance coil....If a 4" diameter form is used and a wire size of #30 enameled (92.3 tpi) you would need a winding length of 1-7/16".

IRON POWDER TOROIDAL CORES

When selecting powdered cores for a specific purpose it is helpful to understand the basic differences between the FERRITE and the IRON POWDER materials. Each group has a number of various sizes and mixes. Each mix has slightly different specifications in regard to permeability, saturation flux density, frequency range, temperature coefficient, etc. This offers the design engineer a wide choice in the selection of cores.

Basically, the FERRITE materials are a composition of magnesium, nickel, zinc, manganese, iron and other oxides. These elements are used in various proportions and particle-size to achieve certain desired characteristics in the final product.

FERRITES, such as those encountered in rods, beads and some toroid cores can offer a greater permeability-factor leverage. The permeability of FERRITE rods and beads will run from 125 to 2500 Mu. and other ferrite mixtures as high as 5000 Mu. This provides the advantage of achieving a relatively high inductance with minimum component size. Similar advantages apply to transformers having ferrite cores. The TV horizontal deflection transformer is a good example.

In view of this, one might reasonably ask: Why not use FERRITES for all inductive requirements? It is a matter of compromise between high permeability and stability. Usually, the higher the permeability of a material, the less stable it is apt to be in the higher frequency ranges. The IRON POWDER core can offer a compromise between high Mu gain and stability. These cores have permeability factors ranging from 90 down to about 3.5 Mu. which will yield inductors with excellent "Q" factors and extremely good stability over a wide range of flux levels, DC drives, and temperatures. In frequency-determining circuits, such as would be found in an oscillator or a carefully tuned RF amplifier operating above 100 Kc, the IRON POWDER core is ideal and offers maximum stability.

IRON POWDER cores are constructed of very finely divided iron powder particles which are insulated from each other. Using a binder medium, this material is pressed into the familiar toroid shape and baked at very high temperature. This proceedure assures an even distribution of powder which contributes to the relatively constant effective permeability.

The spectral ranges of various iron-powder mixtures are determined by particle make-up, size and density. Extremely fine particles and thin, even distribution within the binder medium allow the production of highly stable cores for use in the UHF range and beyond. Therefore, they find themselves being used in circuitry from the simple audio choke to the more complex artificial delay lines working well above most amateur bands.

IRON POWDER cores are not easily saturated, therefore they are not recommended for DC to DC converters, magnetic amplifiers, memory circuits or any other circuit relying on core saturation for its operation. Circuits such as these require saturable cores, which FERRITES can provide.

All toroidal inductors are highly self-shielding. Most of the flux lines are contained wholly within the toroidal form, thereby keeping the flux density essentially uniform over its entire magnetic path. Stray magnetic fields have very little, if any, effect on toroids. It is seldom necessary to enclose each RF circuit in a little metal room of its own to prevent feedback and cross-talk. Toroids simply do not talk to each other.

Hopefully the data contained herein will be sufficient for the amateur to make a good choice in his selection of cores.

Typical curves resulting from various windings on the same core.

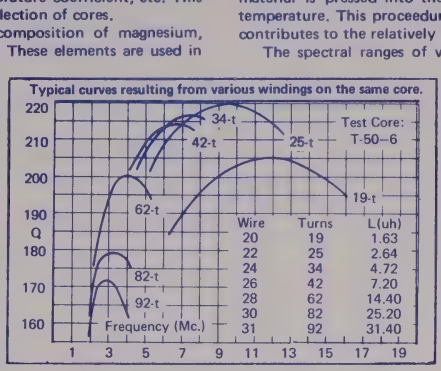

INDUCTANCE AND TURNS FORMULA

The desired inductance or number of turns, using a particular core, may be calculated with this formula when the inductance per 100 turns is known.

$$\frac{L_1}{N_1^2} = \frac{L_2}{N_2^2}$$

L_1 = Known inductance per 100 turns
L_2 = Inductance (known or unknown)
N_1 = 100 turns
N_2 = Number of turns (known or unknown)

INDUCTANCE PER 100 TURNS ±5%

SIZE	Mix-41	Mix-3	Mix-15	Mix-1	Mix-2	Mix-6	Mix-10	Mix-12
T-200	755uh	360uh			120uh	105uh		
T-184	1640uh	720uh			240uh			
T-157	970uh	420uh			140uh	115uh		
T-130	785uh	330uh	250uh	200uh	110uh	96uh		
T-106	900uh	405uh	330uh	280uh	135uh	116uh		
T-94	590uh	248uh		160uh	84uh	70uh	58uh	32uh
T-80	450uh	180uh	170uh	115uh	55uh	45uh	34uh	22uh
T-68	420uh	195uh	180uh	115uh	57uh	47uh	32uh	21uh
T-50	320uh	175uh	135uh	100uh	50uh	40uh	31uh	18uh
T-37	240uh	110uh	90uh	80uh	42uh	30uh	25uh	15uh
T-25	200uh	100uh	85uh	70uh	34uh	27uh	19uh	13uh
T-12	90uh	60uh		48uh	24uh	19uh	12uh	8.5uh

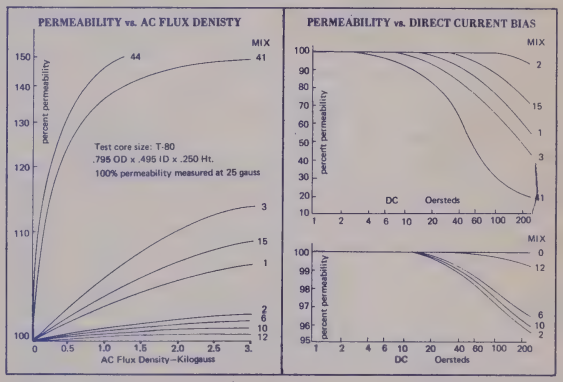

IRON POWDER MIXES—COMPARISON CHART

This chart shows various grades of IRON POWDER cores in order of their permeability. *(Not to scale)*

ONE coil is used at EACH frequency. Compare ONLY different MIXES in the SAME coil.

Solid lines indicate usual frequency range.

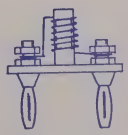

Typical Coil used to obtain Q's shown in chart

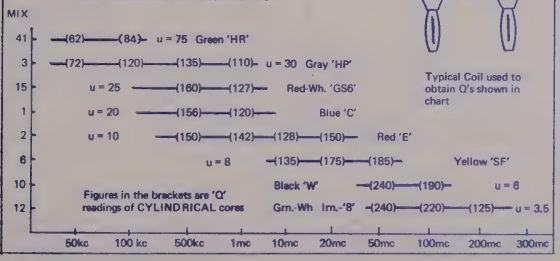

NUMBER of TURNS vs. WIRE SIZE and CORE SIZE

Approximate maximum number of turns — single layer wound — enamelled wire.

Wire Size	T-200	T-130	T-106	T-94	T-80	T-68	T-50	T-37	T-25	T-12
10	33	20	12	12	10	6	4	1		
12	43	25	16	16	14	9	6	3		
14	54	32	21	21	18	13	8	5	1	
16	69	41	28	28	24	17	13	7	2	
18	88	53	37	37	32	23	18	10	4	1
20	111	67	47	47	41	29	23	14	6	1
22	140	86	60	60	53	38	30	19	9	2
24	177	109	77	77	67	49	39	25	13	4
26	223	137	97	97	85	63	50	33	17	7
28	281	173	123	123	108	80	64	42	23	9
30	355	217	154	154	136	101	81	54	29	13
32	439	272	194	194	171	127	103	68	38	17
34	557	346	247	247	218	162	132	88	49	23
36	683	424	304	304	268	199	162	108	62	30
38	875	544	389	389	344	256	209	140	80	39
40	1103	687	492	492	434	324	264	178	102	51

Note: When using a very heavy gauge wire, fewer turns may result.
*Modification of original appearing in Ham Radio Feb. 1972 — Micheal J. Gordon Jr. — WB9FHC

AMIDON Associates · 12033 OTSEGO STREET · NORTH HOLLYWOOD, CALIF. 91607

IRON POWDER TOROIDAL CORES

Revision A

WINDING DATA

The following data is intended as a guide to help in the selection of suitable toroidal cores for your application. Each core/winding combination is shown at near maximum Q.

Core	L/100t ±5%	Wire	Turns	L(mh)	Q Test-Freq. (KHz)	Q
T-94-41	590 uh	#33	800	38.	15	46
T-80-41	450 uh	#30	400	7.9	30	43
T-130-3	*330uh	#28	200	1.14	60	142
		#28	400	4.2	80	176
		#30	800	18.	50	150
T-106-3	*405uh	#24	200	1.41	120	160
		#28	400	5.6	60	164
		#32	800	22.	30	126
T-94-3	248 uh	#28	100	.24	300	148
		#28	200	.88	200	148
		#30	400	3.58	100	158
T-80-3	180 uh	#28	100	.18	400	132
		#30	400	2.9	100	137
		#30	800	11.80	40	120
T-68-3	195 uh	#32	200	.82	200	130
		#33	400	3.4	100	125
T-50-3	175 uh	#32	100	.175	500	110
		#34	200	.620	200	108
T-37-3	110 uh	#33	100	.116	500	86
		#34	200	.480	300	96
T-25-3	100 uh	#34	50	.028	1000	66
		#34	100	.102	600	78
		#36	200	.380	400	86
T-12-3	60 uh	#36	25	.004	2000	32
		#40	50	.016	1500	32

**Values changed since last printing.*

Core	L/100t ±5%	Wire	Turns	L(uh)	Q Test-Freq. (MHz)	Q
T-130-2	110 uh	150/44	200	430.	.16	420
		220/44	170	253.	.20	500
T-106-2	135 uh	15/44	100	135.	.30	475
		#24	80	84.	1.	290
		#20	40	21.6	2.	360
T-94-2	84 uh	#30	125	130.	.90	232
		15/44	200	328.	.78	278
		15/44	400	1420.	.37	276
T-80-2	55 uh	#20	36	7.8	4.	280
		#26	80	37.	2.5	246
		#34	220	276.	.8	188
T-68-2	57 uh	#20	26	3.9	5.5	260
		#28	79	33.	2.5	240
		#34	187	192.	1.	190
T-50-2	*50uh	#20	19	2.08	6.4	207
		#30	79	33.	2.5	240
		#32	200	218.	.4	124
T-37-2	42 uh	#20	12	.64	8.	158
		#24	22	2.16	7.	170
		#26	28	3.34	6.	183
T-25-2	34 uh	#26	14	.72	12.	136
		#30	30	3.22	8.	162
		#36	65	14.5	5.	148
T-12-2	24 uh	#28	9	.19	21.	75
		#32	17	.65	15.	84
		#40	40	3.37	10.	85

Core	L/100t ±5%	Wire	Turns	L(uh)	Q Test-Freq. (MHz)	Q
T-94-6	70 uh	#16	25	4.7	5.	350
		#20	20	3.	6.	340
		#20	35	8.7	3.	339
T-80-6	45 uh	#20	15	1.1	10.	255
		#16	20	1.88	9.	317
		#20	28	3.6	6.	299
T-68-6	47 uh	#20	23	2.42	10.	304
		#20	15	1.08	10.	270
		#22	33	5.1	6.	305
T-50-6	40 uh	#18	14	.86	14.	252
		#22	25	2.60	10.	260
		#26	42	7.5	6.	244
T-37-6	30 uh	#20	12	.48	18.	181
		#22	17	.97	14.	194
		#26	28	2.45	10,	195
T-25-6	27 uh	#24	10	.30	21.	152
		#28	20	1.10	15.	164
		#36	67	11.7	6.	138
T-12-6	19 uh	#30	11	.23	25.	92
		#34	18	.56	20.	90
		#36	25	1.06	15.	96
T-80-10	34 uh	#16	10	.41	20.	195
		#18	15	.83	15.	202
		#26	30	2.91	10.	188
T-68-10	32 uh	#18	10	.37	20.	156
		#20	15	.79	15.	172
		#22	30	2.96	10.	176
T-50-10	31 uh	#20	10	.37	25.	178
		#20	15	.81	18.	190
		#22	20	1.38	13.	188
T-37-10	25 uh	#20	8	.20	30.	138
		#22	15	.61	20.	165
		#26	25	1.54	15.	163
T-25-10	19 uh	#22	7	.12	45.	136
		#24	9	.18	35.	141
T-12-10	12 uh	#28	7	.06	60.	120
		#30	11	.16	40.	101
		#32	14	.26	35.	87
T-37-12	15 uh	#20	4	.05	120.	142
		#20	6	.09	80.	132
T-25-12	13 uh	#22	6	.07	120.	127
		#26	10	.16	60	130
		#26	14	.28	45.	130
T-12-12	8.5 uh	#28	5	.04	160.	113
		#28	7	.06	120.	134
		#30	11	.11	100.	100

USEFUL INDUCTANCE AND TURNS FORMULA:

The desired inductance or number of turns, using a particular core, may be calculated with this formula when the inductance per 100 turns is known.

$$\frac{L_1}{N_1^2} = \frac{L_2}{N_2^2}$$

L_1 = Known inductance per 100 turns

N_1 = 100 turns

L_2 = Inductance (known or unknown

N_2 = Number of turns (known or unknown)

IRON POWDER TOROIDAL CORES

Q—CURVES

Revision A

The following Q-curves will serve as a guide in the selection of R.F. Toroid Cores for your application. Performance extracts are typical of a wide variety of cores in our supply.

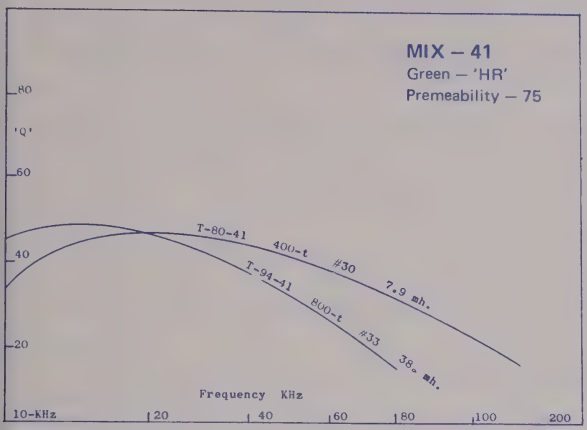

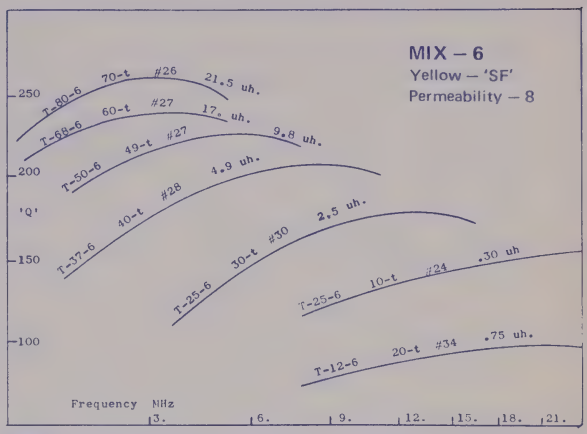

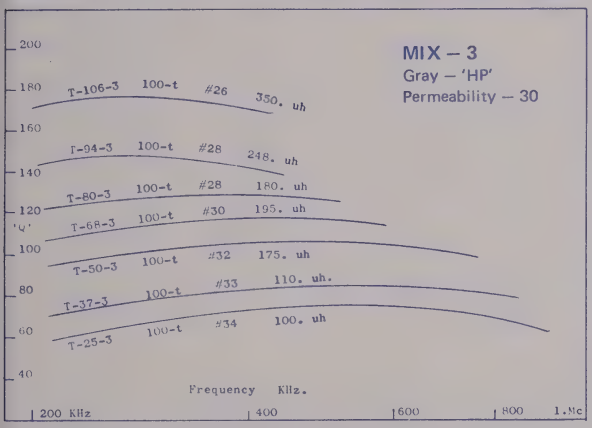

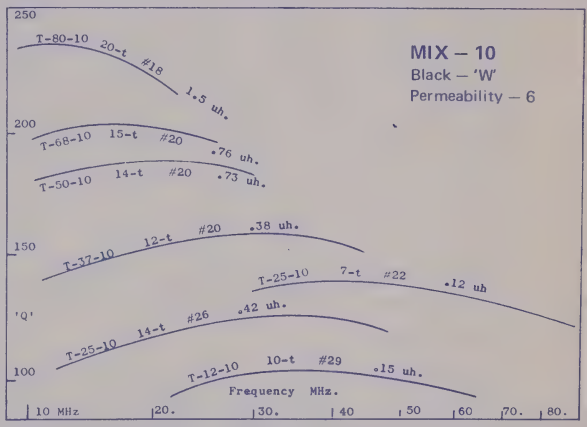

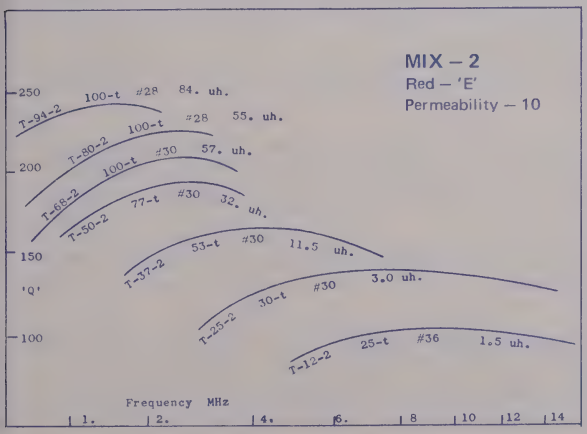

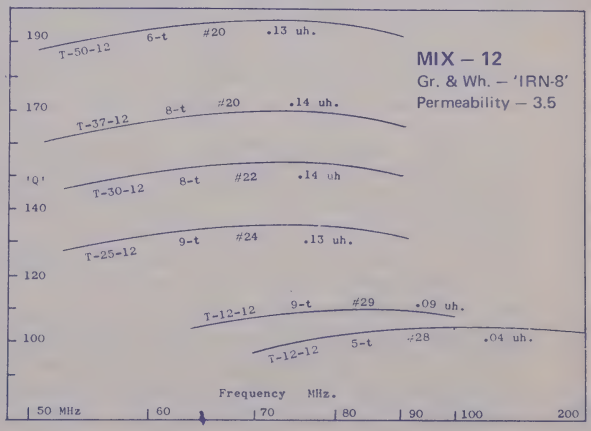

IRON POWDER TOROIDAL CORES

Revision A

IRON POWDER CORES have become very popular with the radio amateur because of their low-loss, high-Q characteristics and their excellant stability. They have very favorable permeability factors for the Ham frequencies and are practically non-saturable.

SELECTION OF A CORE: Use the largest core that space and cost will permit and select the iron powder mix with the best combination of permeability and low-loss for your operating frequency.

POWER RATING: The type T-200 series will handle 100 watts in an LC tank circuit. From this, as a rule of thumb, we can figure that when the Outer Diameter of the core is divided by 2, the power rating must be divided by 4, and so forth.

NOTE: The cores listed are in order of their permeability. The # 41 mix is commonly used for noise filters, low level pulse and power transformers and solid state variable voltage and variable current devices.

PART NUMBERS: The part number of all of our cores will indicate the Outer Diamter and the mix.
Example: T-200-2 has an Outer Diameter of 2 inches with a # 2 mix.
Example: T- 50-6 has an Outer Diameter of ½ inch with a # 6 mix.

CORE SIZE	-41 Mix Green 'HR' 20 kc – 50 kc μ=75	-3 Mix Gray 'HP' 50 kc – 500 kc μ=30	-2 Mix Red 'E' 500 kc – 10 mc μ=10	-6 Mix Yellow 'SF' 10 mc – 30 mc μ=8	-10 Mix Black 'W' 30 mc – 60 mc μ=6	-12 Mix Grn-Wh 'IRN-8' 60 mc – 200 mc μ=3.5	Outer Diameter (inches)	Inner Diameter (inches)	Height (inches)
T-200	$2.50	$2.75	$3.00	$3.50			2.000	1.250	.550
T-130	1.50	1.75	2.00	2.50			1.300	.780	.437
T-106	.95	1.00	1.00	1.50			1.060	.560	.437
T- 94	.70	.75	.75	.95			.942	.560	.312
T- 80	.55	.60	.60	.80	.90		.795	.495	.250
T- 68	.45	.50	.50	.65	.75		.690	.370	.190
T- 50	.40	.45	.45	.50	.60	.65	.500	.303	.190
T- 37	.30	.40	.40	.45	.45	.55	.370	.205	.128
T- 25	.25	.30	.30	.35	.40	.45	.255	.120	.096
T- 12	.25	.25	.25	.25	.25	.35	.125	.062	.050

The powdered iron cores listed are available for immediate shipment. Toroid applications are so numerous that we can not supply winding data for each of the cores in our supply. The advantages of r.f. toroids as inductors and as transformers have been treated in detail in the electronics literature.

Some of the more outstanding uses have been covered in these articles: VFO's – 73 Magazine for Nov. 1966, April 1967 and May 1967. Multiband Tuner – 73 Magazine for August, 1966. The June, 1967 issue of 73 carries a comprehensive article on Toroidal Pi-Network Inductors for high power transmitters. Ferromagnetic theory and practice is prominent in the special issue of Electronics World magazine for October, 1966. Toroidal Baluns have been described in both QST and 73.

When designing for the best figure of merit ("Q"), the following suggestions apply: Use the entire periphery of the core for winding and use the largest wire size that is practicable. Space the turns, if necessary. "Q" is the inductive reactance divided by the copper resistance, so the wire or wires offering the least resistance will yield the highest "Q".

It is sometimes advantageous to use smaller wire sizes in a bifilar or trifilar "ribbon" to create a low resistance – high "Q" inductor. The "Q" can be measured on a Boonton or Heathkit "Q" Meter. Relative "Q" can be observed by noting the depth of the dip on a GDO or Tunnel Dipper. Such readings are difficult on the smaller toroids and the use of a simple temporary link between the toroid and the GDO is suggested.

The "Q" of a tuned circuit is sometimes purposely reduced by bridging the circuit with a "swamping" resistor. Inadvertent "Q" reduction can result from swamping the toroid by incorporating it into a low impedance circuit. Use links, taps or secondaries to match impedances and thus protect the toroid "Q".

The toroid lends itself to broadband r.f. transformers that offer wide spectral excursion and good efficiency. These are made by winding the primary and the secondary(s) bifilar or trifilar. This method is particularly effective in interstage work where extra tuning controls are not wished. The high "Q" of the toroid and the convenience of the 'slug tuned' coil can be combined by connecting the two in series in a tuned circuit.

Machine coil winding

For the serious experimenter, this can be one of the most interesting phases of the hobby. Coil winding requires the utmost in patience and if you are inclined to be of nervous temperament, it is suggested that you teach another member of the family or a friend the facts, and let them do the winding. Low and medium frequency coils use a lot of wire with many turns and it depends on the patience, practice and skill of the operator, whether you end up with a professional looking coil or an ugly mess.

To begin with, I suggest that you use Litz wire. While it is more expensive and harder to find, the efficiency of the finished coil will be worth it. If your favorite radio store does not stock it, he should be able to order it for you.

Another suggestion is to plan your coils along an organized type that will be interchangeable and useful for your line of interest in the low and medium frequency range.

We can consider machine winding of coils in two categories, semi-machine and machine as follows:-

Semi-machine

A hand drill can be adapted for coil winding, in the following manner. The drill should be clamped in a vice-like device in a horizontal position over a steady and firm base. It should be high enough over this base so that the centerline of the chuck will permit turning the largest diameter coil form that you may wish to use. The position of the hand crank is a matter of preference to the operator.

The idea of course, is that the coil form will be turned from the drill chuck. This will require some type of adapter that will support the coil form concentrically to the centerline of the chuck. For short length coils, a length of 1/4" threaded rod stock can be used with nuts and washers too secure the coil form.

For long solenoid windings, it is suggested that a suitable length of 1/4" threaded rod stock be used and at the far end from the chuck, a bracket should be fastened to the base that contains a 1/4" panel bushing that is located on the extended centerline of the drill chuck. This will provide a "steady-rest" for the threaded rod and permit a stable coil winding operation. Here again, suitable nuts and washers will be required to secure and center the coil form.

It will also be necessary to provide a holder for your wire spool. This can be nothing more than two vertical brackets that support a horizontal dowel that will hold the wire supply spool and permit it to float and rotate in the general area adjacent to the coil winding feed point that is controlled by hand.

When winding close-wound solenoid coils, keeping track of the number of turns is no problem, as you can use the wire turns per inch table, Fig. 16. But for pie wound types, that will be described next, this can be a problem. It is easy to check the gear ratio of the drill, where one turn of the crank will produce "X" number of turns on the chuck, but it is easy to forget due to interuptions, etc. The simplest

solution to this problem is to use one of the cheap, surplus Veeder-Root counters and use a cam or trigger from the coil turning shaft to actuate the counter to keep track of the number of turns.

Pie wound coils for the low and medium frequencies can be easily wound using this method....The small diameter (1/4" wide) tape recording reels make an excellent form. Try to get the stiffest material available and center the reel on the threaded rod and secure tightly with the nuts and washers....The winding will start from the core of the reel and from one side....Dress the wire through the slot that is provided in the reel flange, and allow sufficient "lead length" and secure this wire to the side of the reel with gummed tape.

The winding is now made in solenoid fashion, guiding the wire by hand until you reach the opposite flange. The wire winding now reverses its pitch and the second layer is now wound in the same fashion over the first layer back to the starting point....This process is repeated over and over, until the desired number of turns have been made. When winding large coils, it is suggested that you stop after three or four layers, and apply coil dope to secure the windings in case of an interuption....Be very careful in making the wire return after each layer is completed that the wire does not slip down between the flange and the completed layer winding. Due not use too much tension on the wire at this point.

If these coils etc.are desired for plug-in use,a piece of wood or other type of insulating material can be fashioned to accept the reel flanges and use two bananna plugs for same....The old FT-243 type of crystal holders with the cover plate and "guts" removed, makes a nice fit between the flanges and can be easily secured. When used with its matching socket, a simple plug-in coil assembly is available.

Here again, the adjustable coil holders Figs. 15a and 15b can be used.

Machine winding

Many radio experimenters feel that a coil winding machine, and the operation of same, is way beyond their budget and skill....This is not necessarily true. The Morris hand operated coil winding machine complete with gears and all cams, sells for under $20. While it is not a professional machine, with a little practice, it will produce very professional looking coils, of the sophisticated types such as the duo-lateral and pie wound.

This machine when assembled and mounted in a manner to be described, will offer its owner the means for winding a coil when it is required instead of running around to the various radio stores, trying to find the proper value coil, and usually ending up with a substitute. You only have to wind a half-dozen coils and the machine will have paid for itself....I have wound hundreds of coils with mine and it is still going strong.

The machine is easily assembled by following instructions and can be used for operation by mounting it to a steady base. The wire supply spool should be supported by some means adjacent to the wire-lay guide. I used my machine in this manner for some time, but found it to be an uncomfortable operation....After many experiments, I finally arrived at an assembly that is very versatile and will handle most any type of coil configuration that is adaptable to machine winding....Fig. 19 shows my arrangement with a detail description.

The Morris coil winding machine provides three basic functions:-

1. The hand crank shaft turns a cam that pushes against a spring loaded rod that in turn carries the wire-lay guide. This guide actually positions the lay of the wire on the coil form as it rotates. The size of the cam determines the width of the coil winding.

2. The crank shaft ends up with a right angle gear drive that turns the coil form holding shaft. These gears are interchangeable, and by their ratio, will determine the wire-lay pattern on the form as it rotates. Four gears are provided with 39, 40, 42 and 44 teeth. One of my favorite combinations for winding the duo-lateral (honeycomb) coils is the 42 tooth gear on the crank shaft and the 44 tooth gear on the coil turning shaft, using 1" to 1-1/2" diameter forms.

3. The machine includes a turn counter. The coil turning shaft has a worm gear that engages a dial that counts the turns from 0 to 100. The dial has an arrow that can be set to zero, by a set-screw, at the start of the winding.

It is MOST IMPORTANT that before starting to wind a coil, that all set-screws for the handle, cam, gears, shaft coupling and the coil-form holder be tight and secure. Also keep the cam face, gears and bearings well lubricated.

A smooth friction contact between the rotating cam face and the spring-loaded wire-lay guide rod is most important. The cams, as supplied, have the appearance of a metal stamping. One edge is smooth and rounded and the other edge has a sharp break-away, and the periphery is a little rough. I rubbed the face of my cams with fine emery paper and made them as smooth as possible. DO NOT USE A FILE as it is most important that the cam contour not be changed. The end of the spring-loaded shaft that contacts the cam face should be filed smooth and square as possible.

The machine comes with a stamped metal coupling with screws, that is used to couple the coil holder threaded rod to the turning shaft. After winding some twenty coils, the screw threads in my coupling began to strip. I replaced it with a standard 1/4" shaft coupling and it provides a very dependable drive.

The machine comes with two tapered wood spools that can be used for coil form supports up to about 1" diameter....For larger coils, I suggest that you obtain some circular wood discs at least 1" thick in desireable diameters and drill a hole in the center to pass the 1/4" threaded rod. These larger forms can also double as forms for

your hand wound diamond and basket weave type of coils by drilling the necessary holes to accept the dowel-pegs....In making these forms, if you provide a slight taper in the outside diameter that provides an easement to one side, this will help in removing the finished coil from the form....This taper can be easily made by spinning the wood disc with a drill press and provide the taper with sandpaper streched across a wood block.

An excellent form for coils is the simple "pill bottle". I suggest that you visit your local "friendly" druggest and get a sampling of his stock. They come in a multitude of sizes and in many cases, two or three solenoid coils can be fashioned that will telescope within each other to provide selective coil couplings. The same idea can be used for your duo-lateral windings, and the telescoping feature can be used again for proper coupling between the two coils.

The center of the bottle bottom and the cap has to be drilled to pass the coil drive shaft and after the coil is wound, the lid can be fastened to a chassis or breadboard for a simple plug-in coil for experimental purposes.

Most coil forms are smooth and slippery. In winding the wider type of duo-lateral coils, the wire-lay tends to slip back as you cross its maximum width and starts its return, particularly for the first few turns. This can be eliminated, if the coil is to be permanently mounted on the form, by wrapping the wire-lay area on the form with double faced gummed tape (single faced gummed tape can be used by wrapping a 1/4 turn on the form, then fold back and make a tight full return). In any case, start your winding slow and be sure that your wire-lay pattern at the edge of the turn around is accurate for the first few layers....This will insure a well formed coil.

If you wish to remove a coil from the form when finished, the following proceedure is suggested....Wrap about three turns of wax paper that is some 1" wider than the coil width and secure same to the form with gummed tape, at the edges. Now apply gummed tape in the coil-lay area as described aboved. When the coil is finished and secured, the gummed tape is removed from the wax paper edges, and the coil is slid off the form....Carefully remove the wax paper and gummed tape from the inside of the coil, and secure the inner winding with coil dope.

When winding large coils, in case of an interruption, or to make a tap, never stop the winding unless the cam is in the DETENT position (minimum out-throw position). The reason for this is the fact that the wire-lay guide rod, with its spring pressure, exerts pressure against the cam, and if the cam is in anyother position than detent, any type of slight jar, will cause this pressure to snap the cam back to detent position and you will loose your winding. This can be very frustrating after making 200 to 300 perfect turns !!!....I make a habit when winding large coils, of stopping every 100 turns and apply coil dope. When it dries, I carry on....Here again....PATIENCE

When winding large coils with taps, I recommend that all taps be made from the same side with the cam in DETENT position. The tap is made

by pulling a little extra wire from the wire-lay guide and twist a small loop....Now continue with your winding, but start easy from the tap loop and make sure that the wire-lay for the return winding is in proper position. After the coil is finished and has been secured with dope, the tap loop is cut in half and the insulation is carefully stripped and the wires are twisted together and then soldered.

For winding the duo-lateral type of coil, if Litz wire is not used. I suggest a thin stranded type of wire that is covered with some type of fabric insulation....The glossy enameled types are too slippery to form a well looking coil.

The final result however, will depend on the patience and skill of the operator....I never underate the ingenuity of an experimenter.

In learning to use your coil winding machine, start with a piece of wire some 10 to 15 feet long....Experiment with your various gears and cams, as well as coil diameters.....BUT IN ALL CASES, keep a note book on your results, as sooner or later you will arrive at some gear ratios and cam sizes, etc. that will be your favorite, and it is easy to forget.

The following tables and data should be of assistance:-

Fig. 16, Wire turns per lineal inch
Fig. 17, Single layer coil winding data
Fig. 18, Frequency range of various duo-lateral (honeycomb) coils

General notes on coil winding

1. If questionable material is used for a permanent coil form, be sure that the material is dry and apply several coats of a good grade of coil dope to same before winding.
2. In fashioning the forms for your diamond and basket weave coils, taper the ends of the dowel pegs by spinning in a drill press or rubbing with sandpaper. Drill the same size hole as the dowel size. Wax the peg by rubbing over an old candle butt....For a good looking coil, the pegs have to be firm, yet removeable.
3. In winding most of your hand wound type of coils, I find it convenient to rotate the centerline of the form on some type of a shaft that is firmly mounted to a base or clamped in a vise. This will permit you to turn the form as you direct the wire-lay by hand. A steady support for the wire supply spool that is far enough away to allow for proper feed is also important.
4. Waiting for the coil dope to dry can be frustrating. The use of a fan or a blower will cut this waiting time by 2/3rds. A hair dryer is excellent, but watch HEAT, as some plastics may melt.
5. In winding any type of coil, always keep a piece of gummed tape within an arms reach. In case of an interruption, this piece of tape can be used to temporarily secure the winding.

No. of Turns	Size of Tuning Capacitor									
	50 pf		100 pf		210 pf		420 pf		870 pf	
	min.	max.	min.	max.	min.	max.	min.	max.	min.	max.
25	4000	3000	4000	2300	4000	1660	3500	1250	3000	840
35	3000	2000	3000	1700	3000	1210	2500	890	2200	625
50	2110	1450	2110	1200	2000	840	1800	615	1500	435
75	1530	1035	1500	825	1450	575	1300	420	1150	290
100	1200	790	1175	630	1150	442	1050	322	950	225
150	900	545	880	425	850	290	750	212	675	145
200	690	410	675	320	650	220	600	160	525	110
250	560	330	540	250	520	175	475	125	400	85
300	440	290	435	210	415	215	400	100	350	70
400	360	205	340	160	335	105	300	75	250	50
500	280	160	270	125	260	85	240	60	200	40
600	230	135	225	105	220	70	200	50	175	35
750	185	105	175	85	170	55	155	40	125	30
1000	140	80	135	62	130	42	125	30	115	20
1250	115	62	110	50	105	30	90	25	75	15
1500	90	50	88	40	85	25	75	18	50	12

Fig. 18

The above table shows the frequency range of various duo-lateral (honey-comb) coils in kHz, and is to be used for guidance purposes only.

The number of turns required in a coil in order to achieve a required inductance, depends on three major factors....Diameter of the coil, wire gauge and the spacing of each wire in relation to each other in each turn....In other words, for any certain frequency, a close wound coil of the solenoid or pie type will require fewer turns than a loose wound coil of the spider web, diamond weave, basked weave and duo-lateral types....The duo-lateral type could be considered in-between.

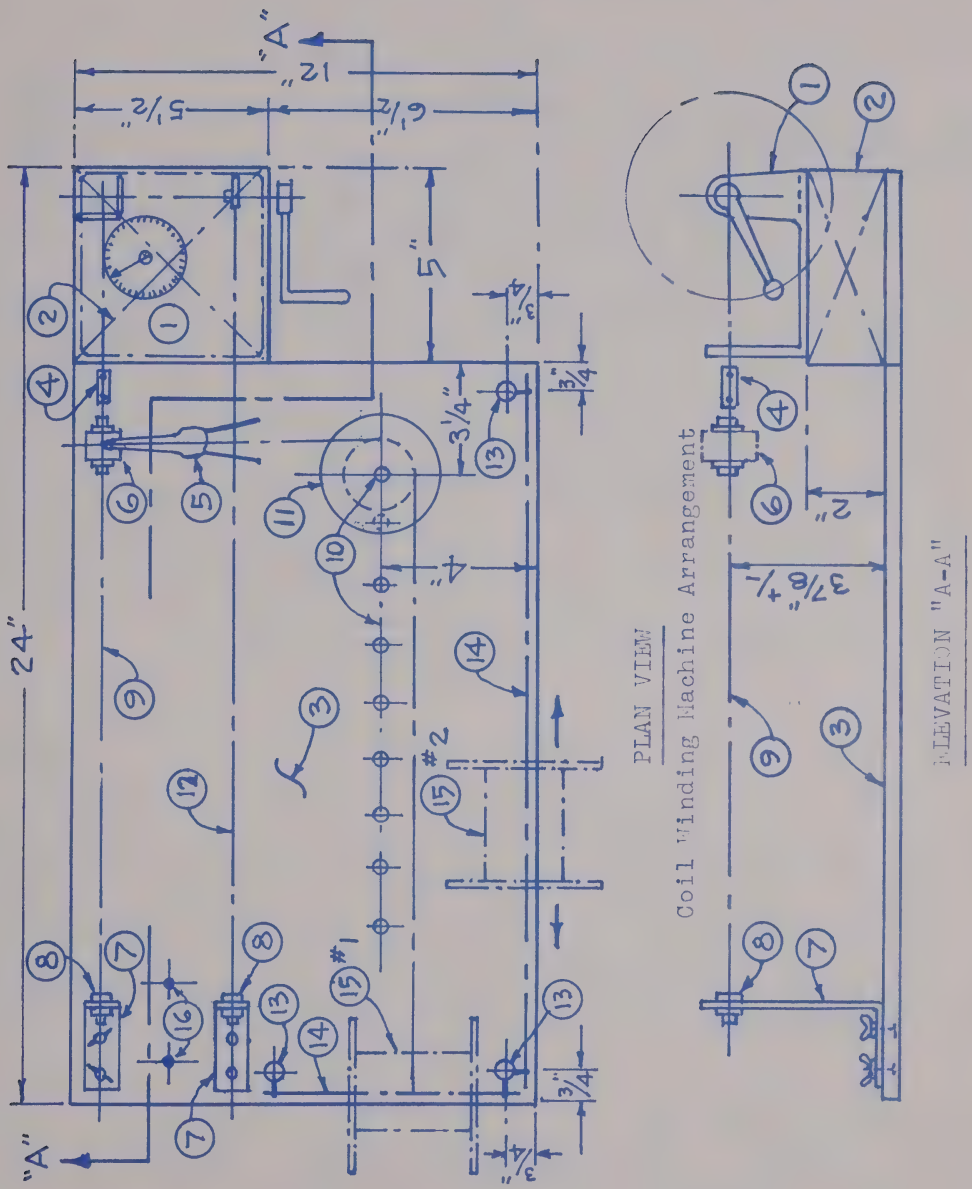

Parts List and description on next page.

Fig. 19

I offer the machine Item #1 for sale at $16.00 each, plus parcel post (2 lbs) and insurance...N.J. residents add sales tax. I have these machines specially packed by the manufacturer with four extra larger cam sizes (3/8", 1/2", 5/8" and 3/4") that are not offered by other dealers....Send check or m.o. to:- Ken Cornell, 225 Baltimore Avenue, Point Pleasant Beach, N.J. 08742

Fig. 19, cont'd.

Parts list for coil winding machine assembly

1. Morris hand operated coil winding machine.
2. Wood blocking for coil winder....5"x 5-1/2"x 2" high.
3. Wood base 3/4" to 1" thick
4. Shaft coupling, that comes with the machine (I prefer a standard 1/4" shaft coupling that has two slotted head machine screws).
5. Wire-feed guide that comes with the machine. See detail "B".
6. Coil form, as required. Secure with nuts and washers.
7. Bracket with bushing item #8 to support end of threaded rod item #9.
8. Standard 1/4" panel bushing. Steady rest for ends of items #9 & #12.
9. 1/4"-20 NC threaded rod, 17" long (Hardware store item).
10. Ditto, cut from item #9, but only 6" long. This rod supports item #11 and the baseboard is drilled and tapped to suit requirements.
11. 3" diameter tape recording reel. Float this reel on the support rod item #10 with a nut and washer below, and position same to suit the wire-feed guide item #5. Remove same for long solenoid windings.
12. 1/4" cold rolled steel rod, 22" long, to support the wire-feed guide. This rod replaces the short rod that comes with the machine. See the following general notes.
13. 1/2" dowels to support wire spools, three required, see detail "C".
14. Ditto, to support wire spools in horizontal position on item #13.
15. The wire spools are shown in two positions.... 15, #1 is for winding pie or duo-lateral coils (particularly when wound in a series of same)....Position 15, #2 is used when winding a long solenoid winding....See general notes
16. Heavy wire some 3" long to store extra cams and gears.

General notes

The coil winder comes with a short rod that supports the wire-feed guide, that is supported in cantilever fashion, off a simple bearing that is nothing more than a drilled hole in the aluminum casting. After winding over a hundred coils, I noticed that I was getting an axial shift in the coil lay pattern due to wear on the outboard bearing on the machine....This problem was easily rectified by replacing the short shaft with a long shaft and provided a steady-rest for same at the end of the board with a bracket and a 1/4" panel bushing. IF YOU FOLLOW THIS ADVICE, do not use the average 1/4" rod that you can obtain at the average hardware store, as this is cheap hot-rolled rod stock, and not accurate enough to provide a smooth cycle....Go to the nearest machine shop in your area, and if they don't stock it, they can get it for you.

I secure the bracket that supports the threaded rod coil drive shaft, Item #7 with bolts and wing-nuts to permit easy removal....From time-to-time, I may wish to wind a series of coils on a long tubular form that is too long to be contained within the basic machine assembly. In this case, I remove the bracket and rod, Items #7 & #9 and on the extended centerline of the coil drive shaft, I mount a crutch, as a steady-rest, which is nothing more than a piece of wood that has a suitable "V" notch in same to cradle the long tubular form, and this crutch is contained by a vise or similar device.

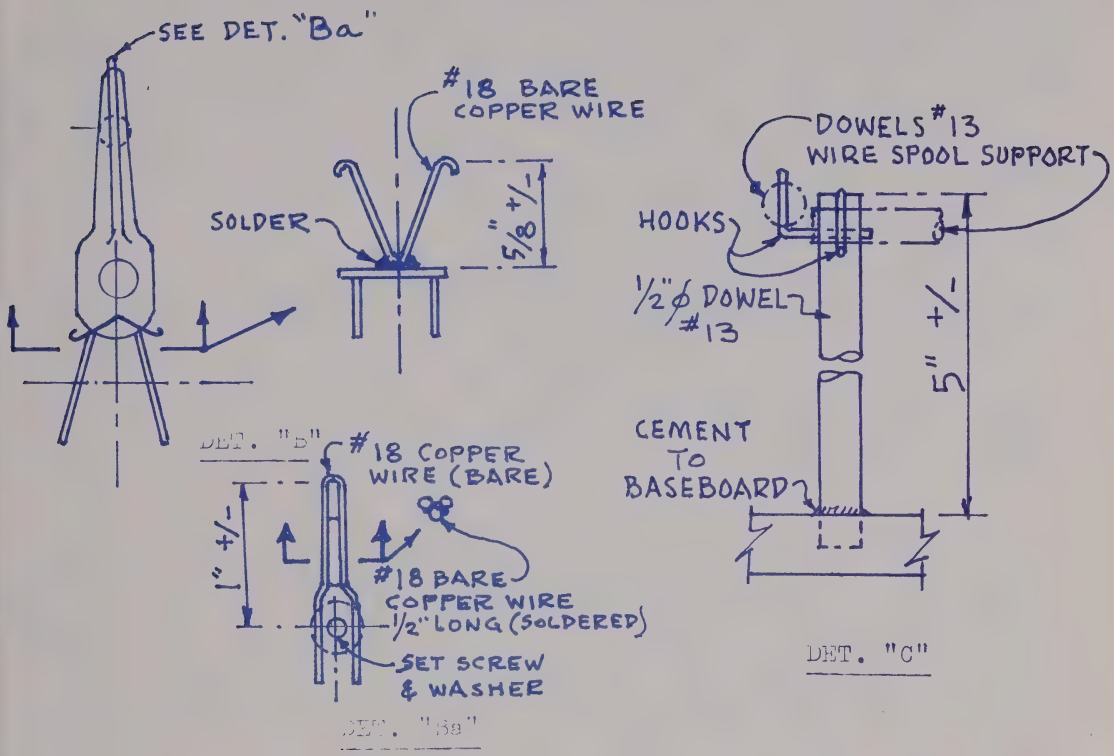

Detail "B" shows the coil winding machine's wire-lay guide. I added an additional wire guide (rabbit ears) soldered to same that is very effective for accurate wire feed.

Detail "Ba" illustrates a home-made wire feed guide....For a good looking coil, it is important that this guide has as small a passage for the wire (without binding) as possible. I use the tip of a sharp ice pick or a drill bit to set the size. I suggest that one of these be made for each wire size that you use.

Detail "C" illustrates a typical wire spool support dowel. The hooks can be cut and bent from coat-hanger wire.

Chapter 3, Antennas

For the average experimenter, antennas that are useable for medium and low frequency reception, fall into three basic categories....One is a long wire, and depending on local conditions, the longer and higher the better....The second is a vertical. This can be made from pipe or tubing and the higher the better. The vertical should be properly guyed and set on a good base insulator. This antenna should work with a good ground rod at or near its base, which also can be used for lightning protection. A series of ground radial wires connected to the ground rod (like spokes in a wheel) will also improve the performance of the antenna (the more and longer, the better)....The third antenna, is a resonant Loop.

On the higher frequencies, the ideal simple antenna is a 1/4 or 1/2 wavelength long that is resonant on or about the desired receiving frequency. On the lowest frequency amateur radio band, 160 meters, a 1/4 wave antenna is only some 125 feet long. On the low frequencies a 1/4 wave antenna that is resonant over a narrow range such as the 160 to 190 kHz band, would be over a 1/4 mile long....The average experimenter therefor, is faced with the problem that a short antenna has to be used and any tuning will have to be accomplished with loadcoils, receiver input circuits, etc., unless a loop is used.

The location of your long wire or vertical antenna is MOST important. We have a severe receiving problem on the low frequencies, that you might not be aware of, and it is "radio frequency interference" (RFI). Unfortunately, it is mostly "man-made"....Atmospheric static is understandable and even a problem on the higher frequencies, but the man-made RFI that pollutes the LF spectrum, is a National DISGRACE....You have to hear the "buzz-saw" hash that your or your neighbors solid state light dimmers transmit as well as power tools and many appliances, to believe the HAVOC that they can create as to LF reception.... Fortunately, this interference is normally confined to a limited area, therefor the location of your antenna is most important.

Keep your receiving antenna as far away from your house wiring, power lines and the neighbors as possible....A shielded lead-in, such as coaxial cable, with the shield well grounded, will help reduce stray noise pick-up....A small antenna that will not pick up noise, is better than a big monster that will....The secret to good reception is the readability of the signal over the noise level (signal to noise ratio).

For some reason, Loop antennas have been ignored as a receiving aid by most of your hams, swl's and experimenters, in general, yet there is probably not a household in the country that does not contain one. I doubt if there has been an AM broadcast set made in the last 40 years that does not contain a loop antenna in one form or another....Most sets have the same common fault, they are directional, and to the annoyance of many housewives can not always be placed on a table in proper geometric pattern to provide the best reception of a desired station and usually may require a turn or two.

This characteristic can be put to good use as a receiving aid.

Due to the innumerable articles that have appeared in the various publications over the years on antennas, mostly for transmitting use, the average radio ham or experimenter is brain-washed into believing that the best transmitting antenna, is also the best receiving antenna. This is not necessarily true, due to the fact that they can also be noise collectors, due to their physical size and possible proximity to noise sources (after all, a transmitter could'nt care less).

I am not trying to sell a Loop antenna as a "gain device", however the NULL that they exhibit off their sides can be put to good use in attenuating (lessen) the strength of an interfering signal or noise source due to its directional pattern. It is not uncommon in ham radio to be in contact with a station in your north or south path, and get interference from another station that is located east or west of you. This is where the loops null will help in reception of the desired signal. Here again, we are talking about "signal to noise ratio".

I have recently finished some extensive experiments using loop antennas for reception on the lower frequency amateur bands as well as the BC band and 160 to 190 kHz band. The results, far exceeded my expectations compared with my normal antenna, particularly when using a simple solid state pre-amplifier.

A simple loop antenna can be wound in two basic configurations:-

The first and simplest is the spider-web winding....Two pieces of wood strips are fashioned as a cross and are mounted to a suitable base. Tacks or notches are used on the cross-frame to contain the wire windings. Wire winding can start from the inside or outside, and the spacing and the number of turns will have to suit the desired frequency range required.

The other type, while using the same cross-type of frame, contains a strip of wood at the end of each appendage, to carry the wire. These strips of wood are slotted to accept the wire winding and are long enough to provide for the desired number of turns and the spacing of same....The finished loop will look like a large square solenoid coil with wide spacing between the wires.

While the spider-web type is the easiest to construct, there is a "school of thought" that reasons:....Since the loops best reception is off the plane of the wires (not broadside), then a loop wound in the solenoid fashion and with the points of the "square", top and bottom, will have a better "capture area".....I can't argue with this, but am inclined to agree ????

A loop antenna with its tuning capacitor is a high impedance L/C circuit. This circuit could be substituted for the rf grid coil in your receiver. Most modern receivers use a low impedance antenna input, so it is suggested that a one turn loop be wound on the loop frame in order to feed the receiver....Experimentation with this coupling is recommended, for best results.

Fig. 20 illustrates a suggested design for a simple loop antenna, that has high and low impedance outputs for receiver feed, as well as a FET preamplifier that can be used with low impedance receiver feed.

Fig. 21 offers data, for guidance purposes, on various loop sizes for a wide range of frequencies.

The first thought that might enter an experimenters mind in constructing a loop, would be to wind the number of turns required for the lowest frequency desired, then tap the loop for higher frequency coverage. While this is not an uncommon practice with coils, my experiments indicate that this is not practical for loop antennas. For some reason the unused turns seem to saturate the loop and sharp resonance is hard to obtain as well as the directional characteristics becoming vague.

For the lower frequency amateur radio bands I have wound two separate loops on the same frame. The loops are spaced some 2-1/2" apart. The frame is 18" on a side....For 40 and 80 meters, I use two turns spaced 1/4", and for 160 meters 5 turns with 1/4" spacing (this loop also covers the higher end of the AM broadcast band). The tuning capacitor is a two gang variable that was removed from an old set and the stators are wired in parallel. I assume it has a maximum capacity of some 600 pf. I use a Motorola HEP-802 fet preamplifier (Fig. 20) and use a small dpdt knife switch to select the desired loop. Its performance far exceeded my expectations.

For 160 to 190 kHz, I use a loop antenna 27" on a side with 30 turns of wire spaced 1/4"....Refering to Fig. 20, I used about a 600 pf capacitor for C1 and use a Arco/Elmenco #469 (170-780 pf) trimmer across same (capacitor CX)....On many occasions, I have been able to copy signals with my various loop antennas that were unreadable with my regular antennas by using the null to attenuate interference.

If you use a loop antenna that has a solid-state pre-amplifier, DO NOT place it in a strong rf field. The loop can act as an absorbtion wave meter and too much rf input can destroy the transistor....In this case protective diodes placed across the loop will protect same.

To conclude my comments on loop antennas, my experiments seem to indicate, that as far as performance goes, the loop likes to have a high capacity for tuning for its L/C ratio. If the largest tuning capacitor that you have is the common 360 pf type, I suggest that you bridge it with fixed capacitors or mica trimmers to extend its range particularly on the lower frequencies.

In the coil and coil winding chapter, I describe a device called the "Goniometer" (Item 9). This unit is used with two fairly large fixed loops that are mounted at right angles to each other. The goniometer is located at the receiver position and with its use, the directional characteristics of the loops can be used as a receiving aid. See Figs. 22 to 25 for suggested arrangements for experimentation.

It should be mentioned that any transmission line between the loops and the goniometer be well shielded and as short as possible, to prevent random pick-up, otherwise the effectiveness of the loops will be negated.

FIG. 20

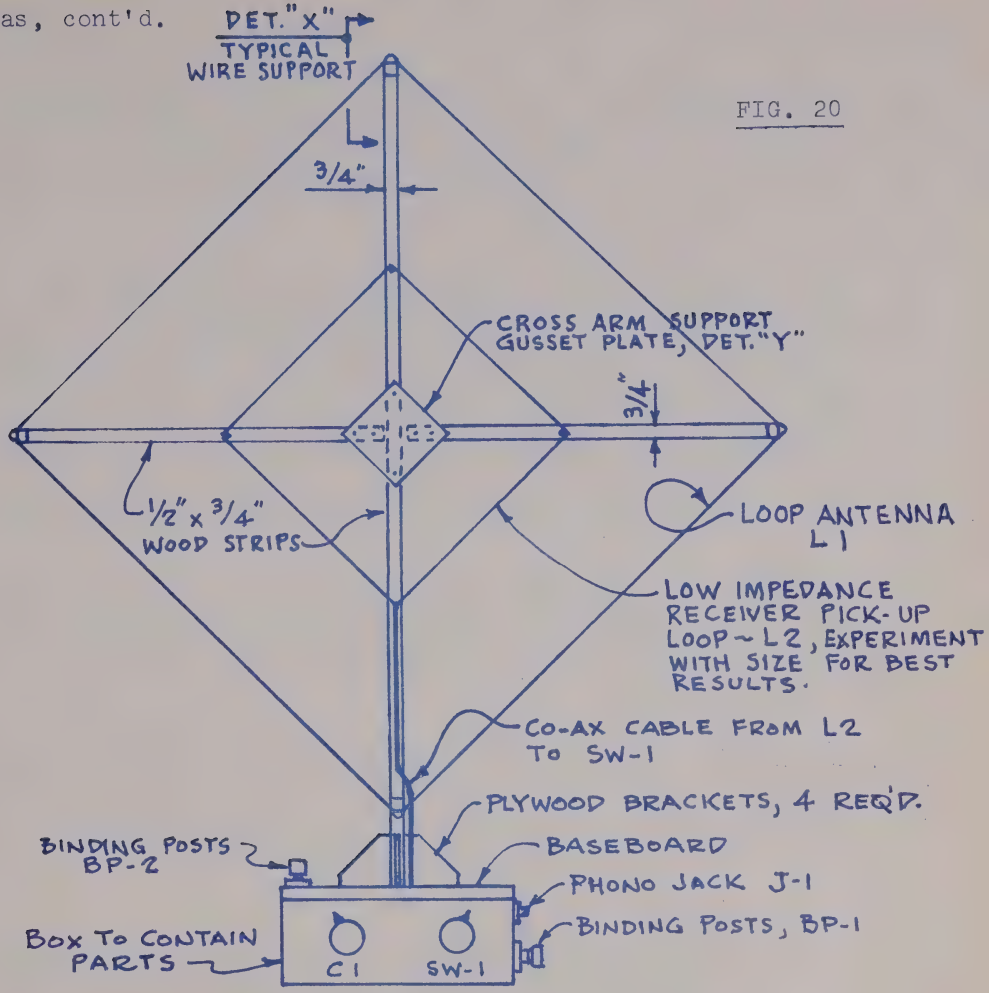

Suggested arrangement for a loop antenna

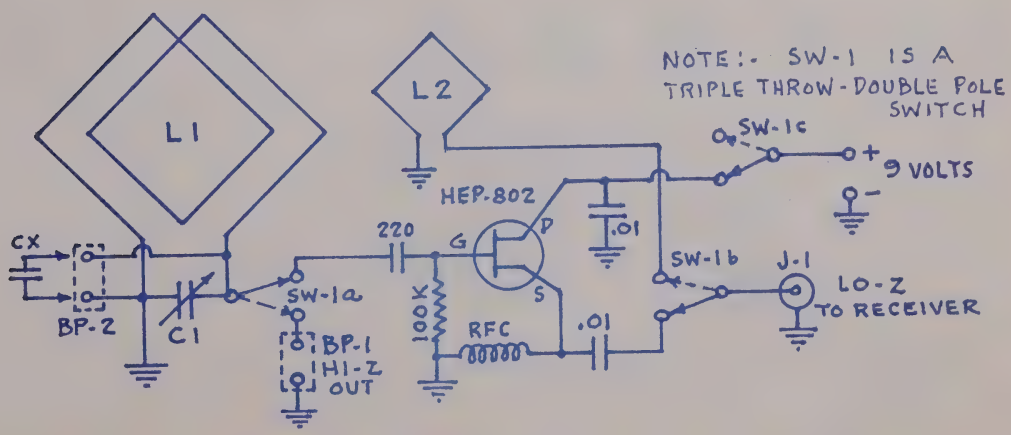

Schematic circuit for above arrangement, see next page for details.

Antennas, cont'd,

The suggested arrangement of Fig. 20, should be self-explanitory. The suggested schematic will provide a low impedance feed to your receiver with or without the use of the fet pre-amplifier. High impedance loop output is taken from binding posts BP-1. The RFC can be a 2-1/2 mh for high and medium frequencies, but I suggest 20 to 50 mh for the lower. The following are some suggestions for building an attractive loop that I learned the "hard way".

The length of the loop wire supports Det. X, will depend on the number of turns and their spacing. When this is determined, cut the pieces to proper length. Be sure to allow for one extra notch in the bottom piece to allow the start of the winding. Clamp the pieces in a vise and drill a line of holes about 1/8" in from one side. The drill should be a little larger diameter than the wire size. The next step is to use a saw and cut a notch into each hole. Now fold a piece of sandpaper back on itself, and work this in the slot to provide a smooth passage for the loop wire. Next take a piece of string a little larger than the wire and rub it over an old candle butt. Work this string through each slot like shining your shoe.

After the frame is finished, wind your loop with flexible stranded wire (Litz preferred), and if Det. Y is used, secure the cross-arms in the minimum extended position. After the winding is finished (allow for sufficient lead lengths at the ends) the 1/2 rounds can be attached to secure the winding.

It is now suggested that the finished loop be hung from the ceiling, or other support, and that a weight be attached to each end wire of the loop and be left over night....This will post-tension the loop wire and help insure a reasonably tight loop winding....The final step is to mount the loop to its base and connect the wires as required.

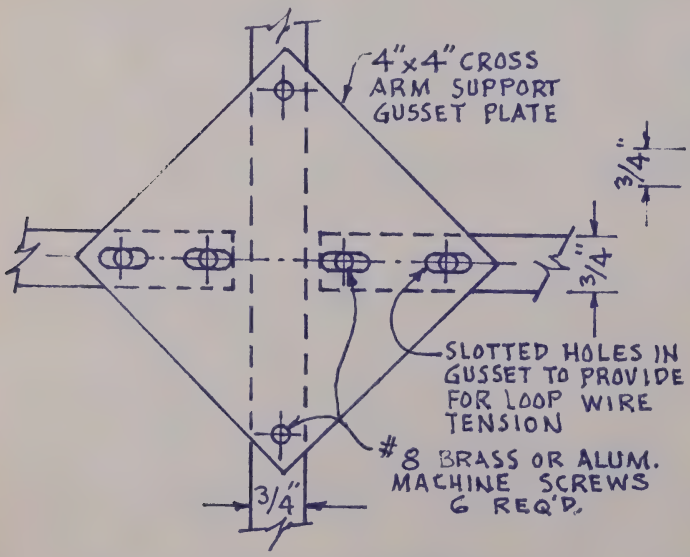

Det. "Y", Cross Arm Support

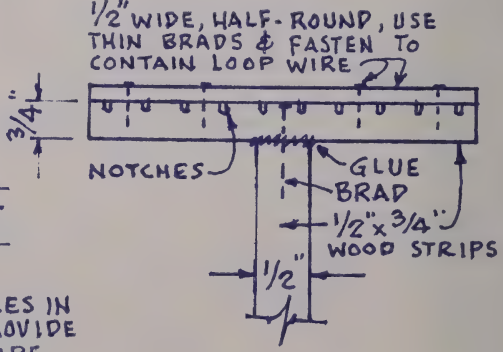

Det. "X"
Typical Wire Support

The following table gives the inductance and frequency range of square loop antennas that are 12", 24" and 36" on a side. Wire spacing for 1/4" and 1/2" are shown....Other size frames and wire spacing can be determined by interpolation....The frequency range shown, is based on using a variable capacitor of 500 pf.

"L" is the inductance in microhenries

No. of Turns	12" square			24" square			36" square			Wire Spacing
	L	kHz		L	kHz		L	kHz		
		max.	min.		max.	min.		max.	min.	
4	13	6240	1978	32	3980	1260	52	3120	988	1/4" spacing
8	41	3510	1112	103	2215	703	173	1710	542	
12	78	2546	807	203	1576	500	346	1210	383	
16	131	1968	623	323	1252	397	559	952	301	
20	168	1736	550	462	1047	332	809	792	250	
4	11	6780	2150	28	4260	1347	46	3315	1050	1/2" spacing
8	32	3980	1260	85	2440	773	145	1816	592	
12	57	2980	943	161	1773	562	281	1343	426	
16	86	2425	768	245	1437	456	439	1072	340	
20	113	2120	672	342	1218	386	625	901	285	

For a larger loop, 5 foot square on a side, with wire spacing of 1/2" the frequency range would be:-

* Using a 650 pf Variable capacitor;

4 turns.....1500 to 750 kHz
8 " ..... 855 to 428 "
16 " ..... 600 to 300 "

* Using a 1400 pf Variable capacitor;

4 turns..... 805 to 460 kHz
8 " ..... 750 to 315 "
16 " ..... 443 to 130 "

Fig. 21, Loop winding data

* Note:- Large capacity variable condensers are becoming hard to find in your average radio store due to the fact that most domestic manufacturers have discontinued production of same.

Your best source are the surplus radio part outlets....Fair Radio Sales Co., P.O. Box 1105, Lima, Ohio 45802, list some large sizes in their latest catalog at reasonable prices.

The Radio Shack lists a 365 pf variable, part #272-1344 in their latest catalog.

Another source is old broadcast sets.

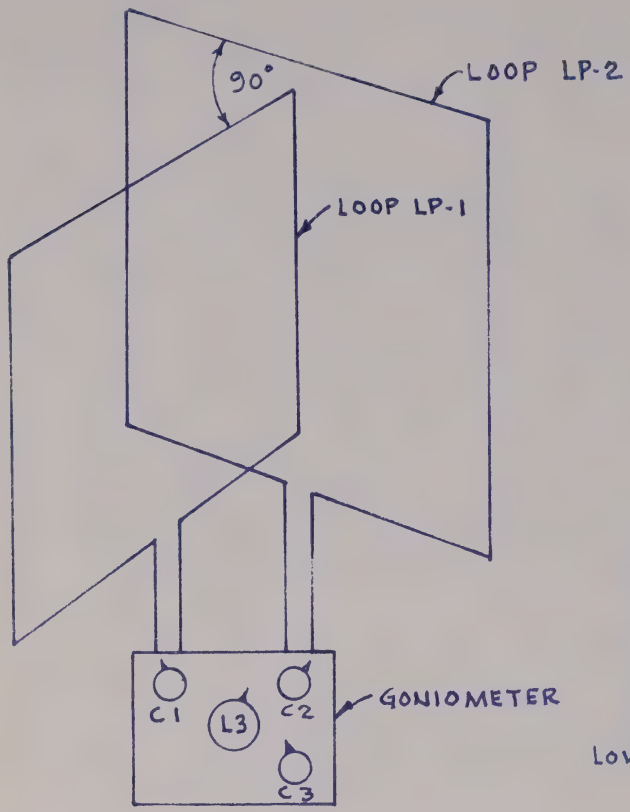

Fig. 22

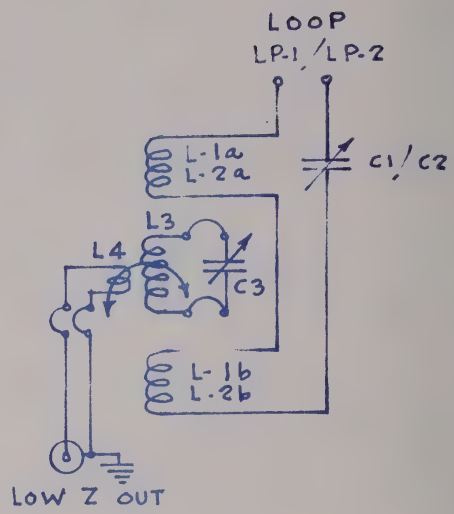

Fig. 24

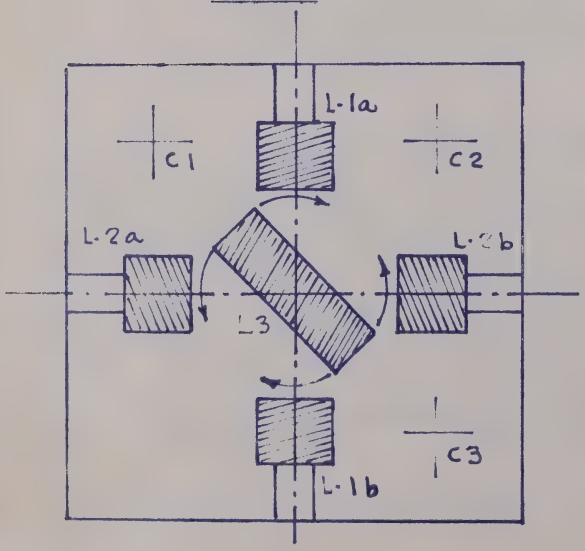

Fig. 23, Goniometer box

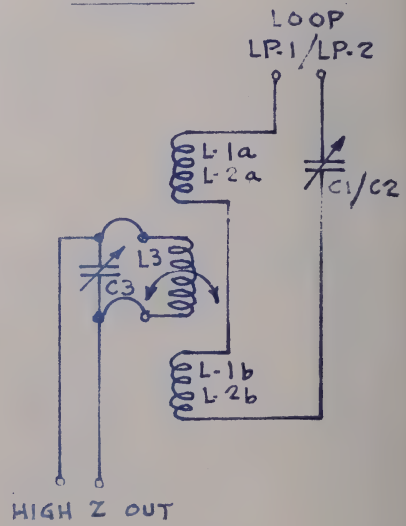

Fig. 25

BOB BRICKER - K4CSV 1/17/89

HI BOB,

HERE IS SOME INFO ON THE VLF AND MF EXPERIMENTER BANDS. I HAVE ENCLOSED THE LOW AND MEDIUM FREQUENCY "SCRAPBOOK" BY KEN CORNELL. ALSO THERE ARE THREE DIFFERENT NEWSLETTERS FOR VLF ENTHUSIASTS. THE "WESTERN UPDATE" IS WRITTEN BY EXPERIMENTERS ON THE WEST COAST, THE "NORTHERN OBSERVER" IS FOR THE EAST COAST AND NORTHERN EXPERIMENTERS, AND THE "LOWDOWN" IS A NATIONWIDE NEWSLETTER IN SCOPE. YOU CAN MAKE COPIES OF THESE IF YOU LIKE, PLEASE RETURN THEM WHEN YOU ARE FINISHED WITH THEM.

THE "HAM TRADER YELLOW SHEETS" IS A CLASSIFIED AD PUBLICATION SENT OUT TWICE A MONTH, SO LISTINGS ARE VERY UP-TO-DATE. SUBSCRIPTION IS $13 / ONE YEAR FOR 24 ISSUES. I HAVE ENCLOSED ONE COPY FOR AN EXAMPLE, PLEASE RETURN WHEN FINISHED WITH IT.

HOPE THIS INFO WILL HELP, GOOD LUCK IF YOU GET SOMETHING GOING ON VLF WITH YOUR BUDDIES. GLAD TO HEAR THE SP-600 RECEIVER IS WORKING FOR YOU.

73'S,

Todd - WD4NGG
LF-MF "ABC"

Chapter 4

The Nonlicensed Communication Bands

160 to 190 kHz

The first section of this chapter is devoted to the 160 to 190 kHz band....Some of the text might be repetitious, but it is done on purpose, as I wish this chapter to be a mini-handbook within the scrap book for an interested readers convenience.

It is as non-technical as possible and is a potpourri of my trials and tribulations in over four years of experimenting with various transmitters, receivers, antennas and many miscellaneous accessories.

We have a lot to learn about using extremely low power and mini-antennas on these frequencies, but it is legal, and I can assure anyone that is sincerely interested and can encourage a local group in the effort to communicate on this band, your results will be proportionate to your efforts.

From time-to-time in this chapter I will use the word "low-fers", this is a abbreviation for "low frequency experimental radio station".

Most experimenters think that this a winter band ???....Yet on April 29, 1972, in the early afternoon, I had the pleasure to participate in a fine five-way QSO (contact) with stations in Darien, Ct., Miller Place, L.I., N.Y., Sparta, N.J., Colts Neck, N.J. and myself in Westfield, N.J....Considering the mileage and the three states involved, I think this could be a "low-fers" record.

Also on July 2, 1972 I was able to copy and tape record beacon signals from Miller Place, L.I., N.Y. (about 80 miles), and Sparta, N.J. and Colts Neck, N.J. (each about 30 miles). The time ran from about 10 am to 1 pm....As I recall, it was a hot, hazy and humid day....All signals were S-9 (very loud), though I will admit that I had my Q multiplier that was attached to my HRO-5-TA1 receiver peaked on the threshold of oscillation....The point is that it can be done !!!!

We may have another first here in northern N.J. with two stations in Madison N.J. having a contact using teletype (RTTY) in early April '72.

In the early spring of 1973, I ran some tests with a station in Colts Neck, N.J., some 30 miles, using suppressed carrier voice transmission. I was able to copy and tape record his ssb signal and he was able to copy both my ssb and dsb signal. The best DX report that I have received on my ssb or dsb signal was from Miller Place, L.I., N.Y. some 80 miles. Due to the very sharp audio filter that was used with the receiver, my voice was unintelligeable, but due to the time and frequency, it was a reliable and interesting report.

The following text might not paint a "pretty picture" of what the average experimenter will face in trying to use this band for communications purposes, but I promise you that they are the basic facts and NOT fiction, as I have experiensed.

160 to 190 kHz, cont'd.

Restrictions covering the use of nonlicensed radio transmitters is covered in many paragraphs in the Federal Communications Commission Rules, section 15....Extracts of these rules are included in the appendix, titled "Does my transmitter need a license?", bulletin OCE 11, dated July 1973....It is a MUST reading for any experimenter. It should also be reviewed by holders of the older issues of 2/68, 1/69, 3/72.

These rules cover transmitters designed to work anywheres in the radio spectrum from 10 kHz to 3,000,000 mHz. With the exception of three ranges, there are no restrictions on power or antenna size, but there are stringent field strengh restrictions. Field strengh readings are determined by a formula based on frequency/distance ratio.

The three ranges where field strength restrictions are waved are:-
1. 160 to 190 kHz (one watt of power and a 50 foot antenna), #15:203.
2. 510 to 1600 kHz (100 milliwatt of power and a 10 foot antenna) #15:204.
3. 26.97 to 27.27 mHz (100 milliwatt and a 5 foot antenna), #15:205. This covers the familiar hand-held CB walki-talkies, and will not be covered in this scrapbook.

It is surprising how long paragraph #15:203 escaped the attention of the died-in-the-wool radio buff.To my knowledge, the first mention of this priviledge that appeared in a national publication was in the April 1968 issue of CQ Magazine....The article described a simple crystal controlled transmitter and contained other accurate and relevant facts concerning the band. It was unfortunate that it appeared in the April issue as I think a lot of readers and myself included, thought that it was an April-fool article....About a year later, I ran into a group of experimenters via amateur radio, that were communicating with each other on the band, and I became a sudden victim of experiment-titus-nocturnal.

The results too date have not been too encouraging, yet we have spent countless hours exploring the use of low power and mini-antennas for reliable communications, within the text of the law, to analyze the effect of fade, static, man-made-noise (RFI) and the competition with high powered commercial stations, undulating sub-carriers, etc. during both winter and summer seasons, with reasonable success.

The best DX reception report too date, is the copying of a Los Alamos, N.M. stations beacon in the Los Angeles, Ca. area at over 700 miles. Florida experimenters report 200+ miles, and here in the north-east, contacts in the 100+ mile range are too numerous to mention in detail. It should be mentioned that the antennas and receiving equipment used are usually quite sophisticated, and by the use of CW (code).

The most detailed series of articles concerning 160 to 190 kHz appeared in the January and February 1972 issues of Popular Electronics magazine and detailed a transmitter and a receiver for the band. I find it somewhat difficult to agree with some of the information contained therein, and will comment as follows.

To begin with, the equipment as described is suitable for the reception and transmission of an amplituted modulated signal only, and the authors inference that communications in the 100 mile range, even under ideal conditions, can be made, using the equipment as described, I feel is miss-leading....I do not know of any experimenters among our many groups that have had any success using AM for reliable communications

over a few miles, let alone 100....As mentioned before, the use of supressed carrier for voice transmissions show promise.

The transmitter (Jan.) issue uses a 12AU7 dual triode. One half is a self-excited Hartley oscillator (without voltage regulation) and the second half, an un-neutralized triode rf amplifier....Either one of these circuits could prove to be a complete disastor, in the hands of an inexperienced novice....The receiver (Feb.issue) is basically a good design. I can not see however, spending the money and time, to end up with a fixed-tuned AM receiver that is incapable of receiving CW and suppressed carrier voice transmissions. With a tuneable front-end and the addition of a beat frquency oscillator (BFO), it could be a respectable receiver....The first three stages would make an excellent converter.

To conclude my comments on these articles;...The authors inference that this is a neglected band and is relatively unknown and unused may be true as far as experimenters are concerned but not as far as use by high-powered authorized services....A tune through this range with a good receiver and antenna, will prove this.

Several other articles have appeared recently on this band as follows:-

73 Magazine, May '73 (A transmitter design and comments on antenna effiencies)....QST Magazine, January '74 (An excellent solid state converter, a crystal controlled transmitter and general comments by Jim Hagan, WA4GHK)....QST, February '74 (Comments by Doug De Maw, W1CER in Technical Topics).

In spite of the problems previously mentioned, there are some reasonably clear spots that can be put to good use for communication purposes.

My first advice in getting started, is to use the "buddy system". Encourage some friends in your area to participate. In this way, you can start together, and it is easy to check on the telephone and eyeball at will as to progress.

I sincerely hope that the following text might help in getting an experimenter started in the right direction and help to prevent some of the frustrations that most of us go through in the beginning.

Reception

Nothing could be more true than the old saying; "If you can't hear them you can't work them".....enough said !!!!

The only restrictions for operation is the transmitter power and its antenna length. If you have an efficient transmitter and a good antenna, thats as far as we can go as far as transmitting is concerned. The secret to success from here on in will be the receiver, its antenna and accessories.

There are two obvious approaches to receive thse frequencies, one is to use a receiver that covers the range. The other is to use a converter with an accessory receiver.

Low frequency receivers are not common in the USA, but are common in

Europe as many countries have a LF broadcast band that covers 150 to 260 kHz. Most of these receivers do not have a BFO. There are also some all-wave receivers available that have a LF range, but my experience indicates that most of these receeivers do not have the stability, sensitivity and selectivity necessary for serious communications use as well as lacking a BFO.

There are many surplus receivers available that tune this range and the following lists some of the common types:-

RBL (TRF, 15 to 600 kHz), RAK-5 (TRF, 15 to 600 kHz), RSK-6 (15 to 600 kHz), DZ1, CRV46123 (Superhet., 15 to 1500 kHz), BC-453 ARC-5 (Superhet 190 to 550 kHz), R11-A (Superhet., similar to BC-453 but no BFO or dial. See 73 Magazine Sept. '63), MN 26Y (Superhet., 150 to 695 & 3400 to 7000 kHz, no dial) and the BC-1206 (Superhet., 200 to 400 kHz, no BFO. Extremely compact, Works off 24 volts d.c.).

Lafayette and Allied Radio Companies advertise receivers that cover the band as well as the Drake SW-4A and SPR-4....I have had no personal experience with these receivers, so can not make any comments on their performance on 160 to 190 kHz....Due to the money involved, I would suggest that you compare the receiver against a "known" before purchase of same.

If your starting from "scratch", and own a good communications receiver the best approach is to use a converter....Considering price, compared with performance, the best surplus receiver is the BC-453. This receiver will require some conversion work that should not be beyond the ability of the average experimenter. There have been many articles written on the conversion of these receivers since they tuned to 455 kHz, which is a standard IF frequency in many receivers for use as a Q multiplier. See QST, Jan. '48, Feb. '51, Sept. '59, Mar. '60, Feb.'61 and CQ Magazine, Feb. '49.

The Cowan Publishing Corp. (CQ Magazine), 14 Vanderventer Ave., Port Washington, N.Y. 11050, published a handbook called "command sets", that contained a series of articles for conversion of the ARC-5 series of surplus receivers of wich, the BC-453 is a member. This handbook is no longer published, but the articles contained therein are now included in a new publication called "Surplus conversions".

The lowest frequency in the tuning range of the BC-453 is about 188 kHz but this can be lowered by adjusting the built-in padder capacitors that are located on top of the main tuning capacitor gang....In my case, I added mica compression trimmers across the rf, mixer and oscillator coils and moved the band to around the middle of the dial, to give me better LF coverage. The 85 kHz IF's provide extremely sharp selectivity and it might be of interest to note, that the construction of these IF transformers, provides for an adjustable coupling of the primary and secondary coils therein. I still see these fine receivers advertised at very reasonable prices.

For those who may wish to purchase a converted BC-453, can contact R. Sanserino, 8422 Crane Circle, Huntington Beach, Ca. 92646.

There are two basic faults with the BC-453 design. the first is the choice of the conversion tube (mixer-oscillator). The 12K8 (or 6K8 if

converted to 6.3 volt tubes) is a noise generator....I made a tube socket adapter for my set and substituted a 6U8A for my 6K8 with a very noticeable improvement in the noise figure. Twin triodes such as the 6J6, 12AT7, etc. would also make a good substitution. In this case a small capacitor may be needed to get proper oscillator injection into the mixer.

The other fault is the lack of suitable means to provide a good antenna match to the rf amplifier. Some experimenters add an antenna coupling coil wound on the rf amplifier coil form....In my case, I use a tunable pi-network between the antenna and the receiver input. See Fig. 33

To conclude my comments on existing LF receivers, there are some models of the Hammurlund super-pro as well as the National HRO series (using the "H" coil) that will cover this range.

As mentioned before, if you have a respectable communications receiver, then a converter is your best bet....The solid-state converter described in the January issue of QST Magazine, 1974. It has been specially designed for 160 to 190 kHz by Jim Hagan, WA4GHK (one of our LF pioneers), and is highly recommended.

Finally, I can not over emphasize the extreme sensitivity and selectivity that you will require in a receiver if you wish to do serious work....The use of Q multipliers, regenerative RF, IF and detector stages, as well as sharp audio filters, are the "name of the game".

Transmitters

To transmit a signal on 160 to 190 kHz, you have four basic options:-

1. A crystal controlled or self-excited oscillator.

2. A master oscillator (using either of the above) and a rf power amplifier (MOPA).

3. Heterodyne by using two crystal oscillators, or one crystal oscillator and a variable frequency oscillator (VFO), both separated by frequencies of 160 to 190 kHz. These two signals are fed into a mixer that has a resonant tuned circuit in its plate circuit to suit the desired LF frequency. This output from the mixer is used to drive a rf amplifier.

4. Suppressed carrier, single or double sideband, for voice.

I feel that due to the power limitation of only one watt, that a transmitter consisting of an oscillator only, is not practical since an oscillator is not as efficient as a rf amplifier. With only one watt to play with, this is important....I do not consider the number of tubes used in a transmitter significant, since you may have over a half dozen tubes in the receiver to hear same.

My first attempt at a LF transmitter used a 6AG7 Hartley oscillator and a 6Y6 rf amplifier. I wound my coils on oatmeal boxes and large cardboard tubes, and while they had a nostalgic value, they were not practical, so I went modern and rebuilt the rig using the pie-wound,

slug-tuned Miller coils.....My first contact however, was with the original rig and some 30 miles at that !!!!

Speaking of coils, the basic value of inductance for these frequencies is around 2 mh. The capacity [illegible] tuning same to resonance will depend on your circuitry and if the coil has a slug adjustment. The standard broadcast set capacitor [illegible] +/- pf will suit most applications and the double-gang type are handy as they can be used in series or parallel to provide a wide capacity range.

For experimenters that do not wish to wind their own coils, I recommend the pie-wound coils of the tapped variety such as the Miller Nos. 9013, 9014 and 6323. These coils provide a tap about 1/3rd in from one end and cost only a few cents more than the un-tapped versions Nos. 9003, 9004 and 6318. These coils provide better flexibility as they can be used in the Hartley oscillator circuit as well as provide a low impedance tap for link-coupling to the antenna or receiver feed or in any circuit where a low impedance tap is required.

From time to time, I have used the typical 2-1/2 mh (3 or 4 pie) rf choke in various experimental circuits and provide a tap (or taps) in the following manner;....Take the tip of a pointed instrument and carefully loosen and unwind the wire that runs from the bottom of one pie to the top of the next pie. Loosen for a full turn, then cut this loose loop in half. Fold these two loose half loops back and clean the ends with fine emery paper, then twist together and solder.

Some of your TV linearity coils are useful. The Miller #6323, for example has the fantastic inductance range of 0.5 to 5 mh (10 to 1) using its slug adjustment.

I suggest that a serious LF experimenter review the coil winding chapter and regardless of whether you wind coils by hand or machine, the results permit you to be independent of the radio stores and the mail order houses.

I recently converted an old Central Electronics model 10-B exciter over to LF....This was a heterodyne type of exciter that was very flexible as it could be used for most any type of voice mode (single or double sideband and amplitude and phase modulation) as well as CW. It generates internally, its basic signal at 9 mHz and by inserting an external signal of proper frequency, the sum or difference of these two signals can be heterodyned to most any desired operating frequency. For operation on 160 to 190 kHz, I use an external variable frequency crystal oscillator (VXO) using crystals in the 8810 to 8840 kHz range (These crystals are very cheap, and were popular for use in the old 2 and 6 meter communicators). With the VXO, I can get a "rock stable" swing of some 4 to 6 kHz depending on the crystal used. The only change made to the circuit besides reducing the plate input power, was to remove the 2-1/2 mh choke in the final amplifier plate feed circuit with a higher value (10 mh or higher).

In any home-brew construction or conversion, BEWARE of the 2-1/2 mh rf choke in the grid or plate circuits as they can be self-resonant. I suggest a minimum of 10 mh, but the higher the better, within reason.

A stable variable frequency oscillator in the hands of an experienced operator is a handy device as it will permit you to move your signal, at will, within the band....Crystal control however, offers the comfort to know that you are at all times, where you want to be. Crystals for these frequencies, while more expensive than the higher frequency type, are probably not more in cost than a commercial coil and a stable tuning device for a VFO. While I am not promoting crystal control, it would be handy for a "net" operation. Before deciding on any crystal frequency, monitor the band for a reasonable time, to be sure that you select a reasonably clear frequency....Also send a diagram of your oscillator to the manufacturer so that he can give you a close tolerance crystal. A simple crystal oscillator is detailed in Fig.26.

Finding the band

To start with, let us assume that you have a receiver that is capable of tuning through the desired range. Unless you have access to an accurate frequency meter, you are probably not sure of the actual band-edges and frequencies in between....Let us also assume that you have constructed a variable frequency oscillator, power amplifier type of transmitter.

We can now calibrate the VFO, and then use it as a frequency meter to calibrate your receiver by the following method:-

All oscillators generate harmonics of their fundamental frequency by multiples of x2, x3, x4, x5, etc....We can therefor use the harmonics that fall into the AM broadcast band, use the harmonics that beat with a broadcast station as an accurate check-point....The following is an example of this based on BC stations in the metropolitan area of NYC.

Freq.	x4	x5	x6	x7	x8	x9	x10
160 kHz	640	800 WMTR	960 WEAV	1120	1280 WADO	1440 WBAB WMBV	1600 WWRL

190 kHz	x3	x4	x5	x6	x7	x8
	570 WMCA	760	950 WHVW	1140	1330 WEVD WPOW WTNJ	1520 WTHE WSLT

For other sections of the country, local newspapers should list the frequency of your local broadcast stations in their radio column.

For a complete listing of all broadcast stations in the USA, I suggest you get a copy of "Communications World" at your local magazine store (if they don't have it, they can order it for you). This magazine contains "Whites Radio Log" of all AM, FM and TV stations in the USA, by area, frequency, and operating hours.

While the above only lists the band edges, other known broadcast stations can be used to plot a curve on graph-paper to give you a fairly accurate read-out, for calibration purposes....It should be noted, that your equipment should be warmed up for at least 15 minutes, before

calibration read-outs are obtained....For the un-initiated, when a harmonic of an oscillator beats against a known signal, it will sound like a whistle, and the pitch of the whistle will lower as you approach zero-beat. At zero-beat, if you tune carefully, you can hear the "cycle tick-off", and at NO TICK-OFF, your zero-beat and thats IT, and this is your calibration point....This same system can be used to check the stability of your oscillator....If you beat your oscillator against a broadcast station and obtain a beat-note, if over a short period of time, you notice a change in the beat-note frequency, this will indicate that your oscillator is NOT Stable and circuit modifications should be made....It is suggested that you follow the guide-lines in most of your handbooks, as too VFO designs.

When using the harmonic system for calibration of your VFO, DO NOT USE only one harmonic in the BC band. Be sure to use at least two or three. If for example your VFO was tuned to 285 kHz by error, this would double to 570 kHz and beat with WMCA, however the other multiples would be wrong.....While using this system to calibrate your VFO, you can at the same time use the same signal to calibrate your receiver.

After you have your oscillator fundamental frequency established, there is one other thing to BEWARE of if you are using a rf amplifier. This rf amplifier can also act as a frequency doubler, tripler, etc. This can easily happen if you use a wrong value coil, or a right value coil with shorted turns. It has happened to me more than once, and is very hard to detect, because the oscillator is still radiating the proper fundamental frequency....This is where a simple absorbtion type wave-meter (that can double as a field strength meter, described later) is invaluable. See Fig. 27.

A wave-meter is nothing more than a tunable L/C circuit (a coil with a variable capacitor in series with same) that is resonant through the desired frequency range. This tuned circuit is connected to a micro-ammeter through a diode detector. When the coil in the wave-meter is loosely coupled to an operating rf coil and tuned to the same frequency, the wave-meter will absorb some of this rf energy and through rectification by the diode, will register on the meter. See Fig. 27.

Antennas

As mentioned in the antenna chapter, the best receiving antenna is the one that will give you the best signal to noise ratio. There are no rules governing the size or configuration of same....A good antenna at Petes location, might be a "wash-out" at yours....Normally, a good resonate vertical antenna that does a "good" job on transmitting, will normally do the same for reception, but there are always exceptions, and fooling around with LF, will prove this point....The receiving antenna and its receiver, will determine your success on LF communications....Your time and determination will "reap its results". This phase in LF communications, is an indeterminal factor.

For transmitting (under the rules) FORGET a horizontal antenna. They will exhibit disasterous attenuation at distances of less than one mile. USE A VERTICAL. For transmitting, we don't care about noise sources, as we do in receiving, so place your vertical as clear of obstructions as possible. A good tube or pipe mast is ideal, but be sure that you use a good base insulator. It is amazing the rf voltage

that only one watt will produce at these frequencies. Work this vertical against a good ground system....Ground rod, with lightening protection, and ground radials (like the spokes in a wheel, the more and longer, the better) and ground the radials to the ground rod.

To my knowledge, all successful experimenters agree that we want VOLTAGE on the 50 foot vertical (if you can't light a neon tube off same, forget it !!!). This requires an efficient loading coil at the base, and possibly distributed loading throughout the total length of the antenna . A top capacity hat is also effective.

Some experimenters locate a resonant L/C circuit between the base of the antenna and ground and inductively couple their transmitter tank coil too same....Personally, I prefer to use link coupling from the transmitter to the antenna base loading coil as it is more convenient to use buried coaxial cable from the transmitter, located in the shack to the antenna, as well as attenuating harmonics through two tuned circuits, than to locate the transmitter at the antenna base. See Fig. 32 for suggestions....By no means, connect your antenna directly to the transmitter tank coil as this will permit radiating any harmonics that are present in same.

The vertical can also be used on the amateur radio bands. The base loading coil for 160 to 190 kHz should be mounted in a weathertight box, and it would be no problem to add a tuning unit in same for the desired ham bands. Switching between the two can be accomplished with a double pole, double throw knife switch.

The mast sections that I use for my vertical are surplus telescoping sections designated #AB-85. They are heavy-duty hi-tensile strength aluminum tubing with a 1/8" wall thickness. They are 1-5/8" o.d. and 36" long. One end of each section is swedged down to 1-1/4" o.d. for some 6" length. The other end contains four wiper fingers on the inside that insure electrical continuity when the sections are joined. They form a sturdy light weight mast at 50 foot heights when guyed at the 1/3rd and 2/3rd elevations.

Fair Radio Sales, P.O. Box 1105, Lima, Oh. 45802, list these sections in their catalog (WS-74, page 25) and advise that they have sufficient stock to warrant mention in this scrap-book....They also list a mast base with a swivel stake (handy for erection). guy rings, guy lines, etc....There is also a MX-384 section that is about 16" long with male and female ends, and contains a husky insulator at the center. This section can be used as a base insulator, or inserted in the mast at desired elevations for inserting traps or loading coils.....Do not compare these items with your standard TV masts and accessories that are offered by your average radio store, yet the cost is compareable.

Fair Radio also offers the MS type of vertical antenna sections (page 15). These can form a self-supporting whip, 15 to 18 ft. long using sections MS-49 (top) through MS-54 (bottom). Each section is about 36" long. Except for the top section, all other sections have a mating male and female threaded matching coupling at each end. The two lower sections, MS-53 & 54, have the same coupling threads, and can be used to increase the length of the vertical antenna. Any additional length beyond the top 15 to 18 ft. whip section will have to be supported by a suitable pole or insulated mast section.

Concluding comments on 160 to 190 kHz.

The majority of the "Low-fers" that I am aware of are licensed radio amatuers. Amateur call signs however, should not be used since this is not an amateur authorized radio service....Most of us use one or two letter calls. Since most of our serious work is done with code (CW), we have found it best to use letter combinations that are easy to identify for weak signal reception. Avoid using a series of dots or dashes as these are hard to pick out from the various undulating sub-carriers, RTTY stations, noise sources, etc., as an experimenters signal.

Most of us use an automatic keyer of one type or another from time to time. This permits you to transmit your call for a lengthy period of time without personal attention to the key. We call this a "beacon" signal, and is useful for testing purposes. Some experimenters have their "beacons" hooked up to an automatic clock timer, for the same purpose, and can transmit at pre-arranged times for DX possibilities. Keyers are available at reasonable prices from most of your surplus houses.

I use a simple "gimmick". It is nothing more than an old gear-head phono motor with the turntable removed. I reamed out an old fairly large tuning dial so that it would fit the spindle. I cut a code wheel out of stiff cardboard using my call "K", and concentrically cemented same to the knob. I stiffened up the edge of the wheel with plastic cement. I then clamped some old relay contacts along side of the wheel and wired them up across my hand key.

Do not expect to make any distance contacts using AM. In a local neighborhood area, you will do better than using the 100 mw CB transceivers (and not interfere with TV), but not as well as the 5 watt CB base stations....BUT on 160 to 190 kHz, you can rag-chew with a friend to your hearts content, LEGALLY.

My advice to the nonlicensed experimenter is to LEARN THE CODE. Even only one word a minute will convey intelligence and who knows ???? This might help you get started on your Ham ticket.

The following are some comments that I would like to make to the 27 mHz citizen band operators:-

Back in 1972, I published a mini-handbook on 160 to 190 KHz, that was well received. Due to same, I received a lot of questions from the 27 mHz CB operators, regarding the possible use of their equipment on this band, regarding modifications, etc.

It must be remembered, that the radio frequency portions of these rigs, mostly transceivers, are designed to work on the high frequency spectrum. The tuned circuits consisting of only a few turns of wire with a small value capacitor, as well as the rf chokes and by-pass capacitors are not of suitable value for operation on the low frequencies.

The audio and power supply portions of these transceivers however, can be used for LF, as they have no concern with the radio frequency part of a transmitter or a receiver.

It is of course, technically possible, that an existing CB rig could be used with a low frequency transverter, but since most of these rigs use AM, it would hardly be worth the effort.....A simple conversion for the transmitter portion, would be easy, by simply removing the rf portion components, and leave the power wiring, and heater wiring, as is, and substitute rf components suitable for LF....The receiving portion would present the biggest problem, and it would be suggested that the receiving portion be removed, and a LF converter be installed in the same place.

I also received many questions regarding mobile operation on 160 to 190 kHz....You must realize that an efficient 1/4 wave whip antenna for 27 mHz is only some 9 foot long, yet on these frequencies, it is over a 1/4 mile long.....Even a well constructed 10 to 12 foot whip, with Hi-Q loading would have poor radiating efficiency for practical use....For reception however, we have had good success with whip antennas, and loops working into a well designed converter, working with a car radio for monitoring our beacon signals, finding quiet locations and detecting noise sources.

As I mentioned before however, "never challenge the ingenuity of an experimenter" !!!!

For collectors and interested parties, I might note, that I still have a few of my original handbook on 160 to 190 kHz available.

Send check or m.o. for $2.00 to Ken Cornell, 225 Baltimore Avenue, Point Pleasant Beach, N.J. 08742

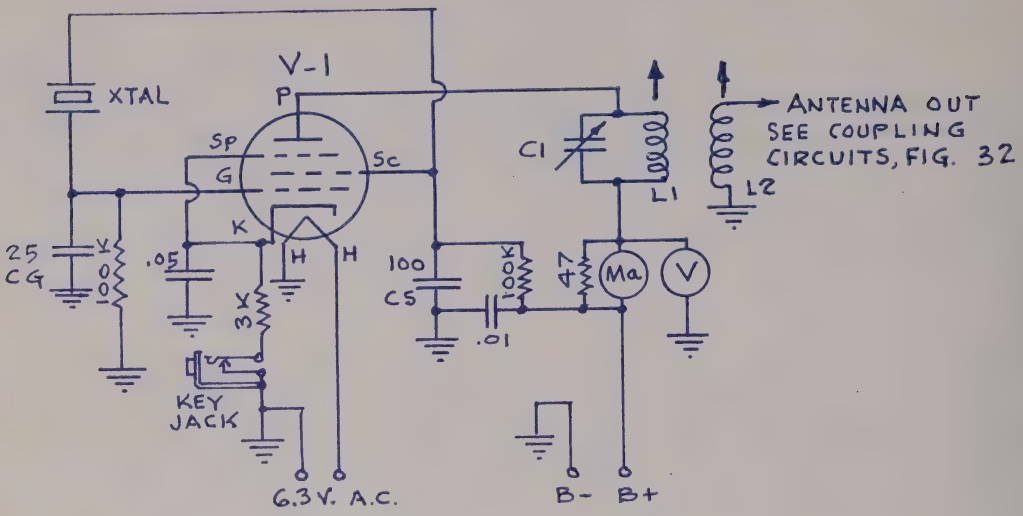

Fig. 26, Crystal oscillator

Most any type of pentode can be used for V-1. Ignore suppressor grid connection for types that don't contain same. Experiment with the values of capacitors CG and CS as well as the grid and cathode resistors for best performance and output to suit the tube type used.

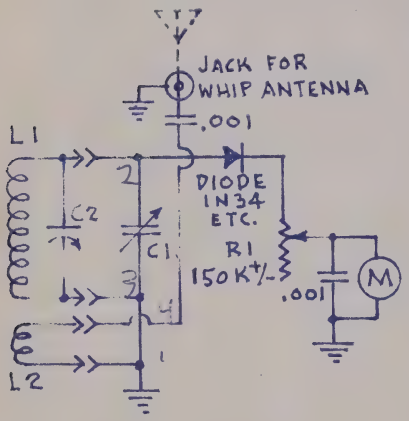

Fig. 27, Wave meter/field strength meter

L1. 300 turns of #28 +/- wire size on 1-1/4" dia. form for 160 to 190 KHz. If not machine wound, cut two card-washers 2-1/2" dia. Cut inside dia. to suit coil form and cement to top of form, spaced 1/2". Coil can now be wound in pie or jumble fashion between the washers.
For 510 to 1600 kHz, 65 turns, close wound.

L2. 25% of L1 turns wound below L1

C1. 365 pf variable capacitor

C2. 380 pf trimmer, Arco/Elmenco #465. Mount inside coil form for band-set the 160 to 190 kHz coil only.

M. 50 to 200 microammeter. 50 is the most sensitive and is preferred.

For flexibility, it is suggested that coils L1 and L2 be wound on the common type of plug-in form. This will permit the use on the ham bands with proper coils. I use a telescoping transistor radio type antenna for the whip, when used as a field strength meter.

When tuning up an antenna, DO NOT use the meter in the shack, close to the transmitter....Field strength in the shack does'nt mean a DARN THING, field strength at the antenna is what counts. A simple revision to the circuit above will permit it to be used as a remote reading FS meter. (RF pick-up near the antenna, and the meter is in the shack). See Fig. 28.

160 to 190 kHz, cont'd.

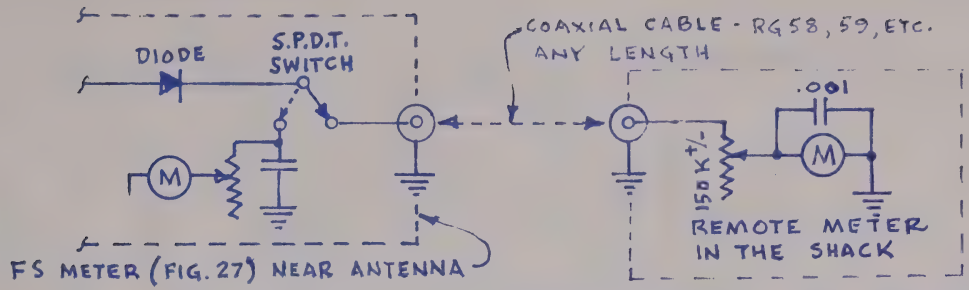

Fig. 28, Arrangement for remote reading field strength meter

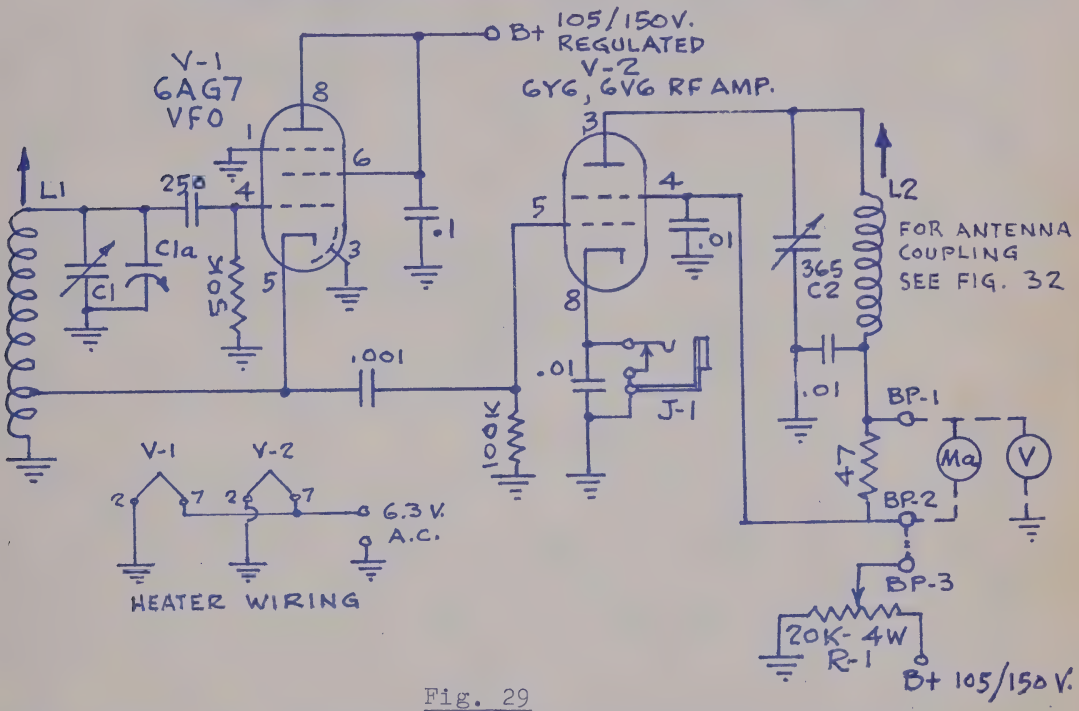

Fig. 29

This simple VFO, RF amplifier type of transmitter was developed after many bread-board layouts were tested. While the RF take-off from the cathode of the VFO is some-what un-orthodox for transmitting circuits, I found that it provided the least "pulling" of the oscillator frequency when keying as well as offering extremely stable amplifier operation....Normally a rf choke or tuned circuit is used in the plate circuit and the rf drive to the grid of the amplifier is taken from the plate through a coupling capacitor.

For CW, short BP-2 and BP-3. For AM connect the secondary of your modulation transformer across same....R-1 is used to set your plate input power to one watt.

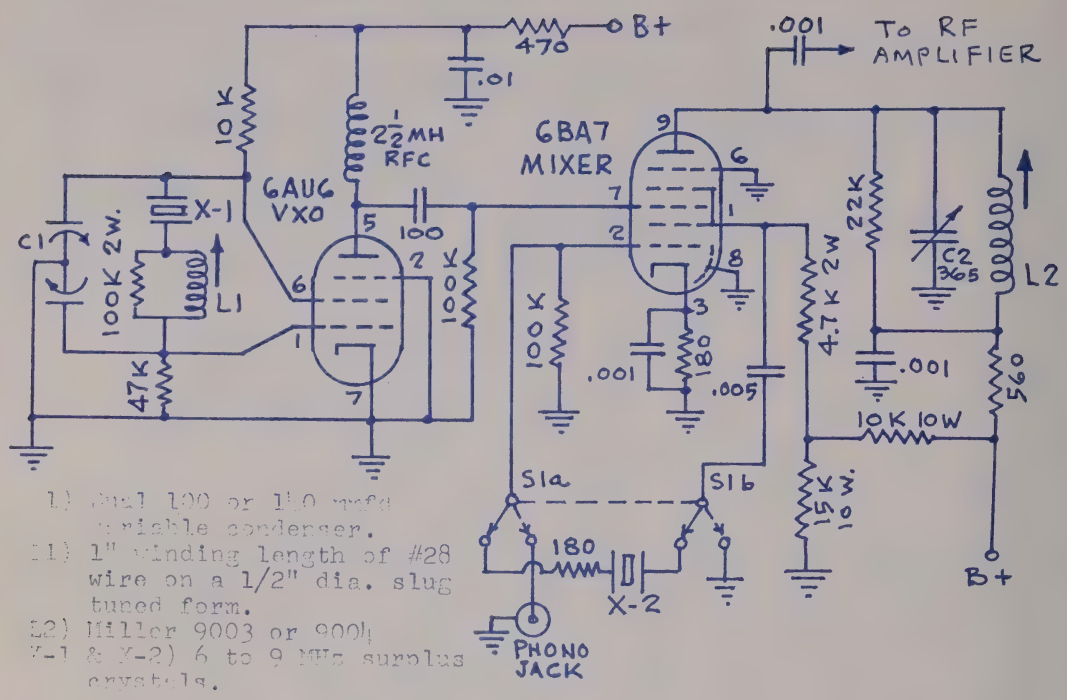

L1) Dual 100 or 140 mfd variable condenser.
L1) 1" winding length of #28 wire on a 1/2" dia. slug tuned form.
L2) Miller 9003 or 9004
X-1 & X-2) 6 to 9 MHz surplus crystals.

Fig. 30
Heterodyne exciter using a variable frequency crystal oscillator

This exciter is designed to use the cheap surplus crystals that are available in the 8 +/- mHz range. Crystals X-1 and X-2 should be 160 to 190 kHz apart on their fundamental frequency so that their difference in frequency (addative or subtractive) will be close to the frequency that you wish to operate on in the band. Here again your heterodyne logic applies (Fig. 6)....For example;...If you have a 8200 kHz crystal, and want to work on 175 kHz, you would need another crystal that is plus or minus 175 kHz which would be 8025 or 8375 kHz. The plate circuit of the mixer, L2, C2 is tuned to the resultant frequency of 175 kHz and can be used to drive an rf amplifier, as shown.

Normally the VXO should provide a stable swing of some 2 to 4 kHz.... Depending on the crystal activity, and the inductance of coil L1, this swing is a matter of experimentation....Due to your heterodyne logic, by reversing the positions of the crystals, the amount of frequency shift can be doubled.

Switch SW1 is provided to permit you to disconnect crystal X-2 and it will switch the mixer input to a phono-jack....This will permit you to insert a low-level signal, such as single sideband, etc., into the mixer and it will beat with the VXO signal from crystal X-1.

Heater wiring is not shown, but should be wired in normal fashion.

160 to 190 kHz, cont'd.

Fig. 31

CW, AM and double sideband (suppressed carrier) transmitter.

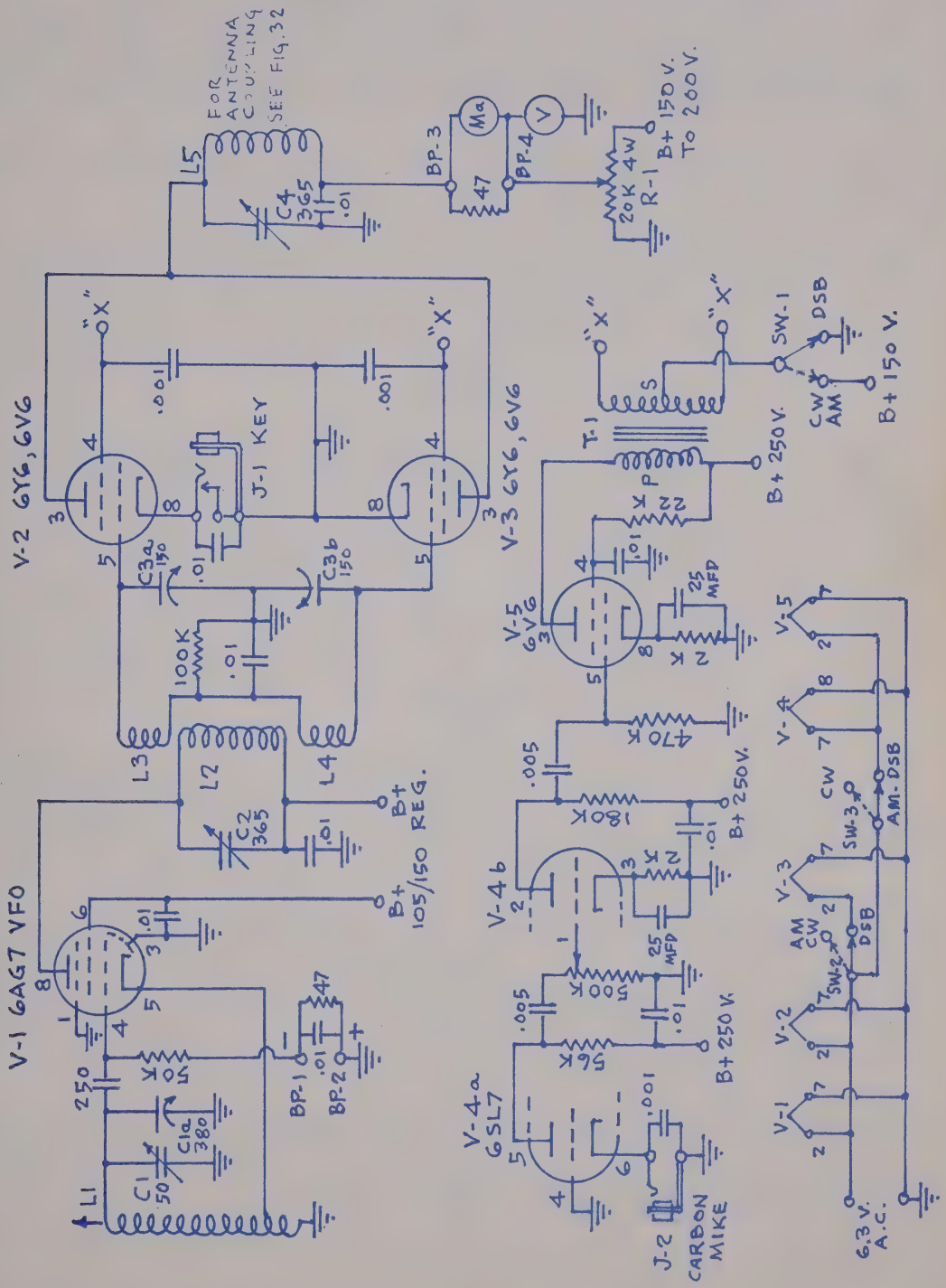

Fig. 31, description

This is a very simple and flexible transmitter. The rf portion consists of a Hartley oscillator (VFO) and a rf amplifier that can be used in a "balanced modulator" configuration (grids in push-pull and the plates in parallel) for suppressed carrier (DSB) voice transmission. Amplitude modulation, as well as CW can be used by proper switching as noted.

The speech amplifier and modulator is "straight forward" as detailed and uses a carbon mike, as we are NOT looking for Hi-Fi.

The VFO will also double as a "grid-dip meter". Coil L1 consists of 300 turns wound on a 1-1/4" dia. form. The cathode tap is made 100 turns from the cold (ground end) of the coil. A one milliameter can be connected across binding posts BP-1 and 2 and this will indicate grid current. When a questionable tuned circuit is loosely coupled to operating coil L1, and if tuned to the same frequency, it will absorb energy from coil L1 and cause the grid current to fall....This is what we mean when we call it a "grid dip meter".

For proper function of this transmitter, the construction of coils L2, L3 and L4 is MOST important. I machine wound mine on a 1-1/4" diameter plastic pill bottle. Coil L2 is wound at the center with 300 turns in duo-lateral fashion. Coils L3 and L4 are wound in same style with 150 turns each, as close as possible on either side of L2. The center-tap is the end of winding of L3 and the start of L4. If a machine is not used, the coils can be wound on small tape recording reels as described in the coil winding chapter. If a solenoid winding is used, wind coils L3 and L4 first on the form, then wind L2 over the center of same. Be sure that the windings are insulated from each other. Depending on the efficiency of the mutual coupling of these coils, trimmer capacitors C3a and C3b might improve grid drive to the final amplifier by improving resonance of coils L3 and L4.

The modulation transformer T-1 is an interstage audio type, single plate to push-pull grids (a push-pull modulation transformer can also be used backwards). In any case the primary and secondary windings should be high impedance. The audio output is connected to the screens of tubes V-2 and V-3 at points "X".

Switching is required to provide for the various operating modes. SW-1 grounds the screens of V-2 and V-3 through the secondary of T-1 for double sideband operation, and provides screen voltage for CW as well as modulation for AM....SW-2 and SW-3 are in the heater circuits and are arranged to disable the tubes that are not required for the various modes of operation....For CW we do not need audio, so SW-3 will disable tubes V-4 and V-5....For CW and AM, we do not need tube V-3 therefor SW-2 disables same and it now acts as a neutralizing capacitor for V-2.

It should be noted that the switching arrangement to suit the various modes could be combined in a rotary switch with proper contact arrangement.

Potentiometer R-1 is used to set input power at one watt.

Fig. 32, Antenna coupling circuits

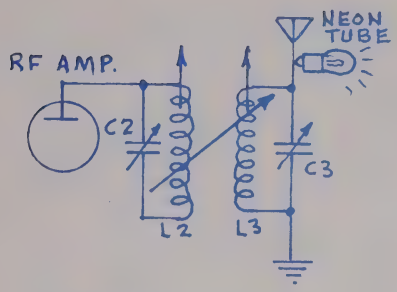

Inductive coupling

1. A hand held Neon tube, even with this low power, is an excellent detector of rf energy....Tune all circuits for maximum brightness.
2. Any antenna will have a capacity effect to ground. The better the ground, the higher the capacity....Depending on the inductance of the base loading coil L3, its tuning capacitor C3 may not be required and resonance may be accomplished with the slug position in coil L3.

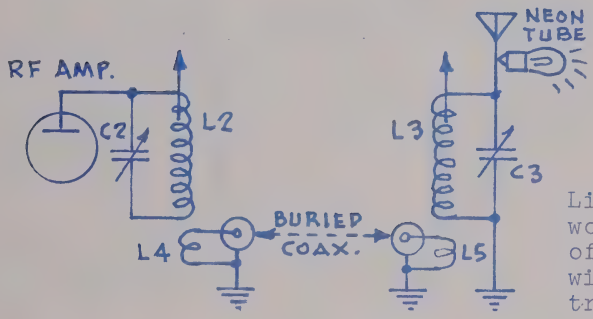

Link coupling

Link coupling coils L4 and L5 are wound at the cold end of the forms of coils L2 and L3....Experiment with the number of turns for best transfer of energy.

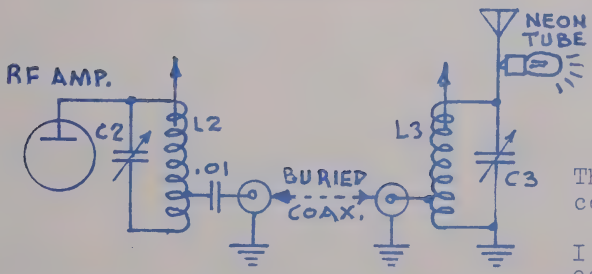

Link coupling, with tapped coils

The coupling tap should be at the cold ends of coils L2 and L3.

I suggest Miller types Nos. 9013, 9014 or 6323.

Note:- The Miller coils mentioned above are wound with two pies in series. The wire at the end of the "hot" pie returns to its connecting solder-lug over the "cold" end pie....Even though the wire is insulated, I have observed arcing at this point. Use the tip of a penknife or ice-pick and dress this return wire as far away from the "cold" end pie as possible.

Regardless of what type of antenna loading coil is used for L3, if its located at the base of the vertical, it should be well protected from the weather. Quite a few "Low-fers" use the basket-weave type, and others also use a variometer configuration.

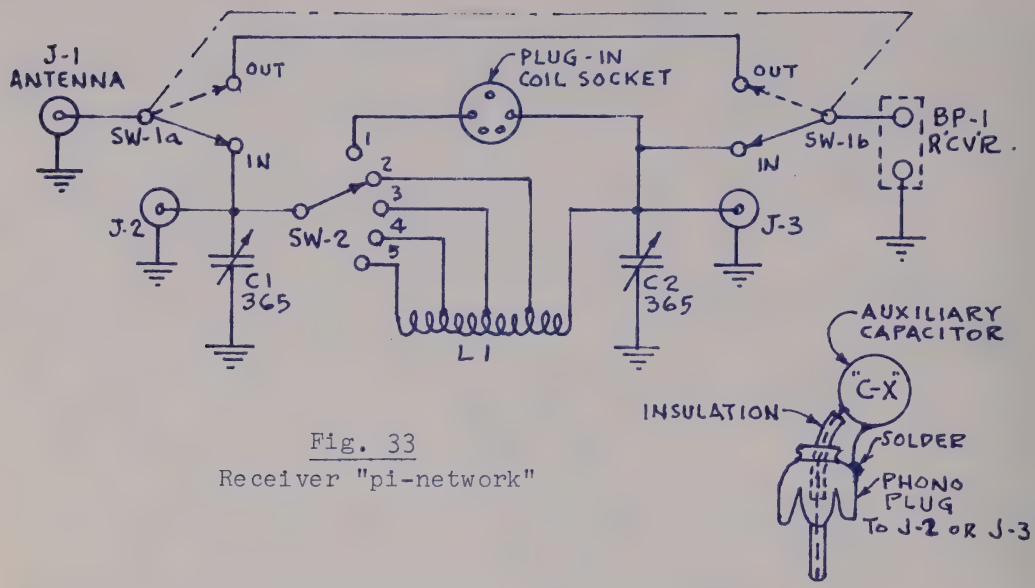

Fig. 33
Receiver "pi-network"

Extra capacity
see text

A simple pi-network connected between the antenna and the receiver input can be a useful accessory.

Few of us actually know what the receivers antenna input impedance is at these frequencies.

I have used this network with various antennas and receivers, and in almost all occasions I can pick-up some two to three "S" points on the received signal.

These "S" points of course, include background noise, etc. but it does give you more signal to work with. This can be important when you are using a sharp audio filter, where the insertion loss can often be quite high.

I constructed this circuit in a 4"x 5"x 6" aluminum box....Coil L1 is a 2-1/2 mh rf choke with four pies. I tapped each pie in a manner that is described in the transmitter section of this chapter.

Phono jacks J-2 and J-3 are provided for extra capacity in case the variable capacitors C1 and C2 do not have sufficient capacity to tune the input and output circuit of the network....Likewise, a plug-in coil socket is provided for an auxiliary coil in case L1 is out of "target" range....This is a very flexible unit, and can be used on the amateur radio bands, as well.

Switch SW-1 will by-pass the unit when not required.

One of our experimenters developed an interesting one tube transmitter using a 6CL6 tube and has several interesting features. See Fig. 34.

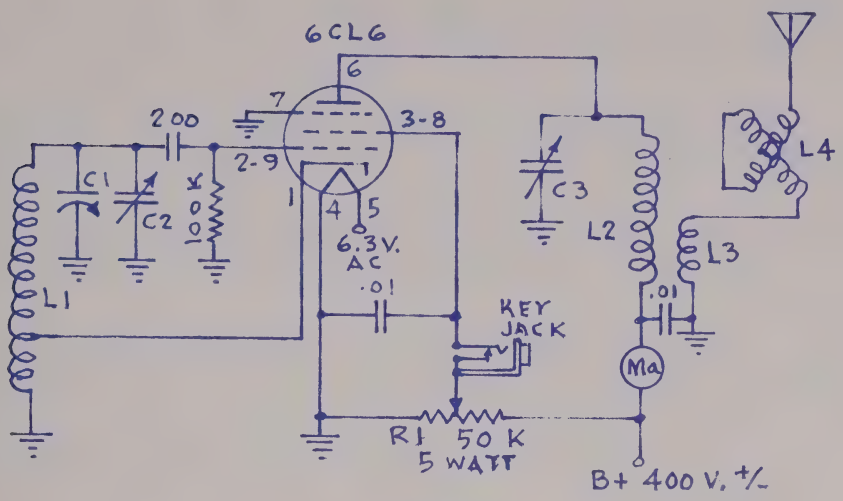

Fig. 34

L1, C1 & C2 as previously described.
L2. 5" dia. Litz wire solenoid, 5"long
C3. To resonate L2
L3. 75 turn basket weave coil 3-1/2" dia. mount inside L2
L4. Large homemade variometer (a BC-306 antenna tuning unit should work fine)

The circuit functions as a VFO/RF amplifier transmitter....Maximum field strength was obtained using high voltage and low current (400 volts @ 2.5 ma = 1 watt), than low voltage and higher current.

Note:- Depending on tube types and characteristics, this voltage/current ratio should be experimented with for best effeciency, with any transmitter.

Potentiometer R1 is used to adjust screen voltage that in turn regulates plate current. This is a simple means for adjusting plate input power and can be used with any pentode rf amplifier.

Keying the screen voltage feed is somewhat unorthodox, but works fine as plate current falls to almost zero with the key up....Since the key is in the screen B+ lead, it can be a shock hazard.

Converting the BC-306 Antenna Tuning Unit to a 160 to 190 kHz Transmitter

The BC-306 antenna tuning unit was used with the old BC-191 transmitter (that also used the "TU" tuning units)....The "heart" of this tuner is a large variometer (4" dia. x 9" long) that has taps that are wired up to a massive switch that is panel controlled to select the desired tap or by-pass the unit....The variometer and switch are contained in a heavy gauge aluminum cabinet 8" square by 16" high, with a black crackle paint finish. The variometer rotating coil is positioned by a large vernier dial.

The frequency range is listed as 200 to 500 kHz, and they are available on the surplus market....I purchased mine from Fair Radio Sales, Lima, Ohio in new condition at a very reasonable price. (See their catalog, WS-74, page 16).

The objective of this conversion will be to use the variometer in series with the antenna to its ground system and make the radiating system look like a resonant circuit at the desired operating frequency.

The switch will not be required, so this space will be used for the transmitter....The transmitter rf amplifier tank coil will be mounted within the variometer coil to provide suitable coupling for same.

To remove the unit from its cabinet, remove the screws around the periphery of the case....Top rear, both sides at the top and front, BUT ONLY the three bottom screws in the front panel....With the case removed, check the unit for possible damage and use an ohmeter to check the variometer for coil winding continuity....We are not interested in the switch as this will be removed to make room for the transmitter.

The first step in conversion, is to remove the switch....This is done by cutting all wiring that runs from the switch to the insulated tap strip that is mounted on the side of the variometer, as well as to the insulators mounted in the cabinet top....This wire is very heavy and I had to use a butane torch to unsolder the wires to the insulators. The switch can now be removed.

We now want to remove the variometer....This is done by loosening the two set-screws in the coupling that contains the variometer shaft. All units come with their own wrench that is held with clips at the bottom of the case....The bolts that hold the coil to its supports are now removed, and the variometer is eased out of its case....The tap strip is now removed by unsoldering the coil taps to same, and removing the tap strip support fasteners at each end.

We now want to add additional turns to the coil....Bolt a solder-lug at each end of the coil using the existing holes left by removing the tap strip....We now add additional turns of wire from the existing coil ends to these lugs....Be sure to wind the new turns in the same direction as the existing coil....I used 135/44 Litz wire and was able to add 35 additional turns at the top, and 15 at the bottom....After this is done, check the finished coil for winding continuity.

The variometer is now remounted in its original location and the bottom end of the coil is grounded to the case, and the top end is connected to the antenna insulator.....We are now ready to install the transmitter....The design of same is a matter of preference, but due to space limitations, it is suggested that one of the single tube type of transmitters, that are described in this chapter be used.

I assembled my transmitter on a piece of copper-foil board (4"x 7") and used a 6BA8 in a Hartley oscillator/rf amplifier configuration. This board is used as a secondary panel and is mounted behind the front panel, in open-faced sandwich style....The VFO tune dial occupies the the original switch hole, and additional holes are drilled in the front panel to suit the necessary transmitter controls.

An important detail with this arrangement is the coupling of the transmitter tank coil to the variometer coil....I machine wound my tank coil on a 2" dia. plastic pill bottle using 300 turns of 135/44 Litz wire with a 3/4" cam on the coil winder....I support this coil inside of the variometer with a 6" length of 1/4" threaded rod and secure same with nuts and lockwashers....See Fig. 35....Any other type of coil for the transmitter tank circuit can be used as long as it will provide an efficient coupling to the variometer.

All external accessories, such as power supply plug, key jack, metering connections, etc. should be installed on the front panel or the top of the unit, due to the cabinet construction.

After the transmitter is installed and has been checked out for proper operation, the variometer is connected to the vertical antenna and its ground system....As mentioned before, this should be a resonant circuit....Use a neon tube on the antenna terminal and rotate the rotary variometer coil for an indication of rf....If you cant obtain same, this would indicate that you need a tuning capacitor across the main variometer coil....As mentioned before, all antennas have a capacity effect to ground, and this capacity effect will be important to the necessary inductance required in the antenna base loading coil to obtain resonance....I ended up with adding a 100 pf variable capacitor across the variometer coil....See Fig. 36.

I was very pleased with the performance of my converted BC-306, and it presented a very professional appearance, yet when used in conjunction with my receiver, it was awkward to use, with hay-wire switching etc. It was at this point that I decided to add a vacuum tube T/R (transmit, receive) switch....Switching an antenna from a transmitter to a receiver is normally accomplished with a relay, or it is done manually. A vacuum tube T/R switch will do this automatically.....It will protect the receiver front-end from overload in transmit position and in receive position, it will act as an rf amplifier....See Fig. 37.

Since the T/R switch needs power at all times, I use the 150 volt B+ for the VFO from the power supply side, of the transmitter on/off switch....I mounted the T/R switch tube and the few parts required, on a small piece of copper-foil board and mounted same with a small bracket under the top of the case, in the back right-hand corner. I also removed the front insulator from the top and used a filler piece, with a coaxial connector, for receiver antenna output.

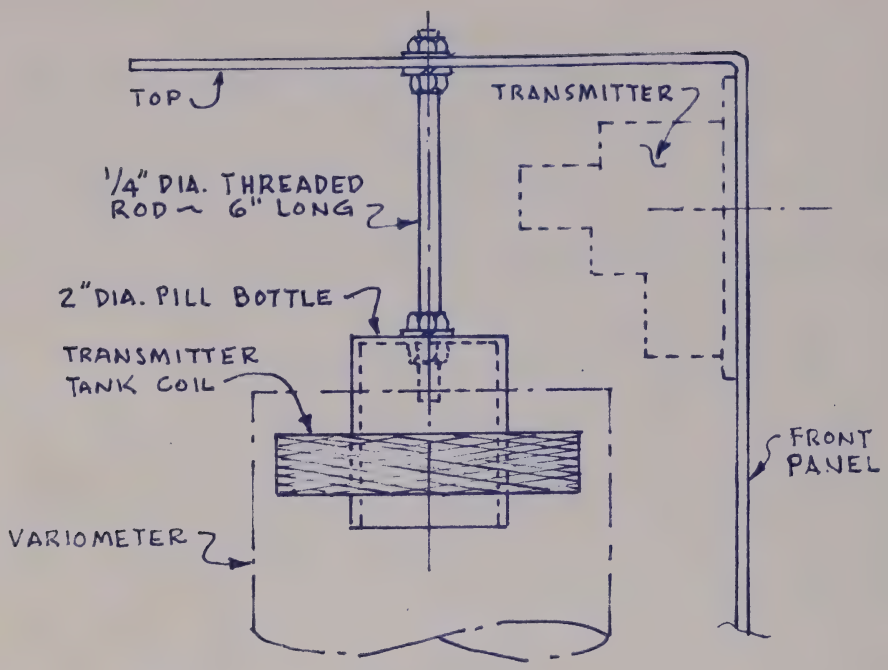

Fig. 35

This sketch should be self-explanitory....The transmitter tank coil by the use of the threaded rod with the fasteners, should be adjusted for best coupling as registered on a field strength meter.

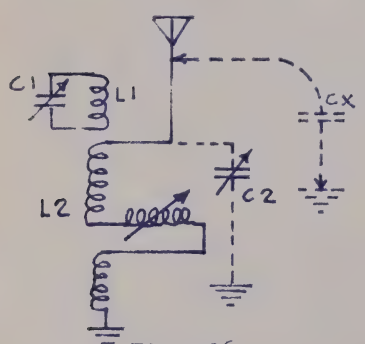

Fig. 36

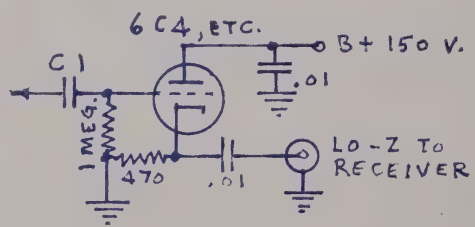

Fig. 37

Fig. 36 indicates the tuned circuit in the coverted BC-306 unit. C1 and L1 is the transmitter tank coil....L2 is the variometer. CX is the antenna capacity to ground and depending on this, C2 may be required.

Fig. 37 is a circuit for the simple T/R switch....C1 is a short length of RG-58 or 59U coaxial cable, some 6" long....Use the inner conductor to the hot side of the transmitter tank circuit, and the outer shield to the grid of the T/R switch tube.

160 to 190 kHz, cont'd. and 510 to 1600 kHz.

The "TU" series, tuning units

This series of tuning units are available on the surplus market. They are plug-in units for the old BC-191 transmitter, and contained all the necessary tuned circuits to provide the transmitter with an operable frequency range of 150 to 12,500 kHz, and are numbered as follows;

TU-1. 150 to 260 kHz *	TU-7. 4500 to 6200 kHz
TU-2. 260 to 400 kHz *	TU-8. 6200 to 7700 kHz
TU-3. 400 to 800 kHz *	TU-9. 7700 to 10,000 kHz
TU-4. 800 to 1500 kHz *	TU-10. 10,000 to 12,500 kHz
TU-5. 1500 to 3000 kHz	TU-22. 350 to 650 kHz
TU-6. 3000 to 4500 kHz	TU-26. 200 to 500 kHz

These units are detailed and described in the War Department Technical Manual #TM11-4017 (I obtained my units and manual from Fair Radio Sales Co., Lima, Ohio)....The first four units (*) are listed in the manual but I have never seen them advertised.

Fig. 38 shows the wiring diagram for the units....The only basic difference is that the low frequency models use a variometer for tuning the VFO and rf amplifier and the higher frequency units use a variable capacitor....All units contain an insulated strip on top of the unit behind the front panel that holds ten bananna plug sockets. For reference purposes, I number these from one to ten, reading from left to right, looking down on the unit with the panel facing you.

These sockets in ALL models, provide the proper circuit connection to the transmitter....All that is necessary, to make an operable VFO, rf amplifier transmitter, is two tubes and a few resistors and capacitors. An external power supply will also be required and voltage regulation for the oscillator is recommended....See Fig. 39 for a suggested circuit and description.

My low and medium frequency activities concentrate on the higher frequency ends of both bands, so I use a TU-26 for 180 to 190 kHz, and a TU-5 for 1500 to 1600 kHz. (I notice that most units advertised for sale have a "B" after the model number)....I used a 6"x 4"x 1-1/2" aluminum chassis for the two tubes and the few parts required....A 8" long by 1/2" wide strip of insulating material is mounted on stand-off studs to the 6" side of the chassis....Install eight bananna plugs on this strip to match the TU unit sockets, and position the strip to the chassis, that when plugged in, the bottom of the chassis is flush with the top cover of the TU unit....I also provide a ground strap from the chassis to the unit using a piece of flexible wire with a spade-lug to one of the cover screws.....I do not connect pins 9 and 10 to the chassis, as these are the antenna take-off pins and should be connected to your antenna or antenna tuner arrangement....To pass the necessary wiring from the bananna plug strip into the chassis interior, drill a series of eight holes and insert small rubber grommets for same.

These units are extremely well built and contain the finest quality parts that I have ever seen....The front panel measures 16-3/4" wide x 7-3/4" high and the unit is 7-1/2" deep....Several of these units could be mounted in a rack or cabinet that contained power supply, controls, modulator, metering, etc. and present a very professional appearance.

160 to 190 kHz cont'd. and 510 to 1600 kHz

The first thing to do with any TU unit, before operation, is to check wiring continuity through the coils and switches....Connect an ohmeter on low sale, across terminals 1 & 2, 7 & 8 and 9 & 10, and using the proper switch, check for continuity.....I have observed some of these units that show signs of oxidation on the switch contacts, that had to be cleaned for proper contact.

The rf portion of the BC-191 uses type 211 tubes. One for the master oscillator and another for the rf amplifier, and being triodes, the amplifier is neutralized. The neutralizing capacitor is located behind the front panel and is adjusted by a thumb wheel behind the calibration chart. The chart has to be removed to make any necessary adjustment. There is a slotted shaft lock just to the right of the thumb wheel, turn this 1/4 turn counter clockwise to unlock the shaft. If a pentode is used in the rf amplifier, Fig. 39, this neutralizing capacitor will not be required and one of the wires going to same, can be snipped off.

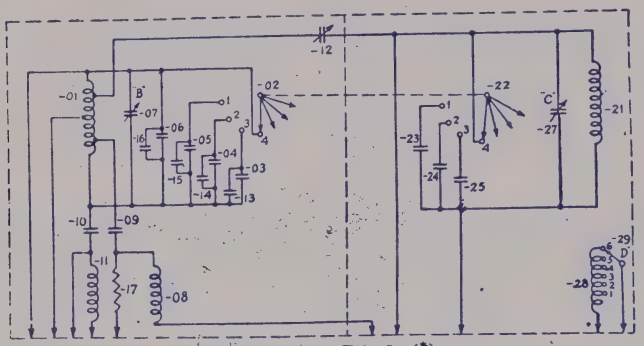

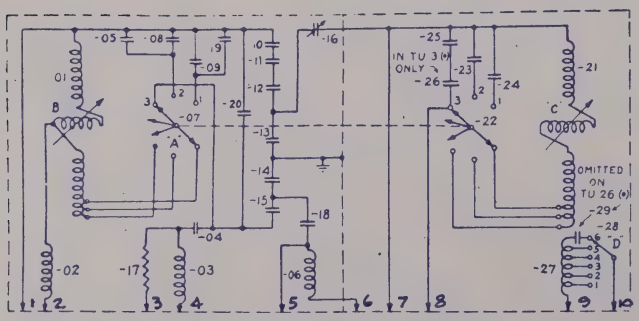

Fig. 38

Parts Data for Transmitter Tuning Unit TU-5-(*)

Ref. symbol	Sig. Corps stock No.	Name of part and description	Function
501	2C8005A/D19	COIL ASSEMBLY: ceramic form; thermal compensator mounted inside coil.	M-o tank inductor.
502	3Z9614	SWITCH: rotary; 4-position; (ganged with 522).	M-o band change.
503	3D9100-11	CAPACITOR: 0.0001-mf, ±2%; 3,000-v.	M-o tank tuning.
504	3D9100-11	CAPACITOR: 0.0001-mf, ±2%; 3,000-v; (ganged with 514).	M-o tank tuning.
505	3D9100-11	CAPACITOR: 0.0001-mf, ±2%; 3,000-v; (ganged with 515).	M-o tank tuning.
506	3D9030-1	CAPACITOR: 0.00003-mf, ±5%; 2,000-v.	M-o tank tuning.
507	3D9020V-4	CAPACITOR: variable; max 135 mmf, ±2%; min 20 mmf, ±1 mmf.	M-o tank tuning.
508	2C8005A/D10	COIL: r-f choke; with resistor 517.	P-a grid.
509	3D9400-6	CAPACITOR: 0.0004-mf, ±10%; 2,500 vdcw.	P-a grid blocking.
510	3D9400-6	CAPACITOR: 0.0004-mf, ±10%; 2,500 vdcw.	M-o grid blocking.
511	2C8005A/D11	COIL: r-f choke.	M-o grid choke.
512	3D9008V2	CAPACITOR: variable; max 26 mmf, ±4%; min 8 mmf, ±1.5 mmf.	P-a neutralizing.
513		CAPACITOR: thermal compensator; (ganged with 503).	M-o tuning compensator.
514		CAPACITOR: thermal compensator; (ganged with 504).	M-o tuning compensator.
515		CAPACITOR: thermal compensator; (ganged with 505).	M-o tuning compensator.
516		CAPACITOR: thermal compensator; (ganged with 506).	M-o tuning compensator.
517	3Z6001E5	RESISTOR: 15-ohm; 4.5w; (ganged with 508).	P-a grid parasitic suppressor.
521	2C8005A/D17	COIL ASSEMBLY: contains coil 528.	P-a tank inductor.
522	3Z9614	SWITCH: rotary; 4-position; (ganged with 502).	P-a band change.
523	3D9090	CAPACITOR: mica; 0.00009mf, ±5%; 3,000-v.	P-a tank tuning.
524	3D9090	CAPACITOR: mica; 0.00009mf, ±5%; 3,000-v.	P-a tank tuning.
525	3D9090	CAPACITOR: mica; 0.0010-mf, ±5%; 3,000-v.	P-a tank tuning.
527	3D9020V-5	CAPACITOR: variable; max 156 mmf, ±3%; min 20 mmf, ±1.5 mmf.	P-a tank tuning.
528	2C8005A/D17	COIL: tapped inductance; mounted in 521.	Antenna coupling.
529	3Z9604-2	SWITCH: rotary; 6-position; (same as 328).	Antenna coupling.

160 to 190 kHz, cont'd. and 510 to 1600 kHz.

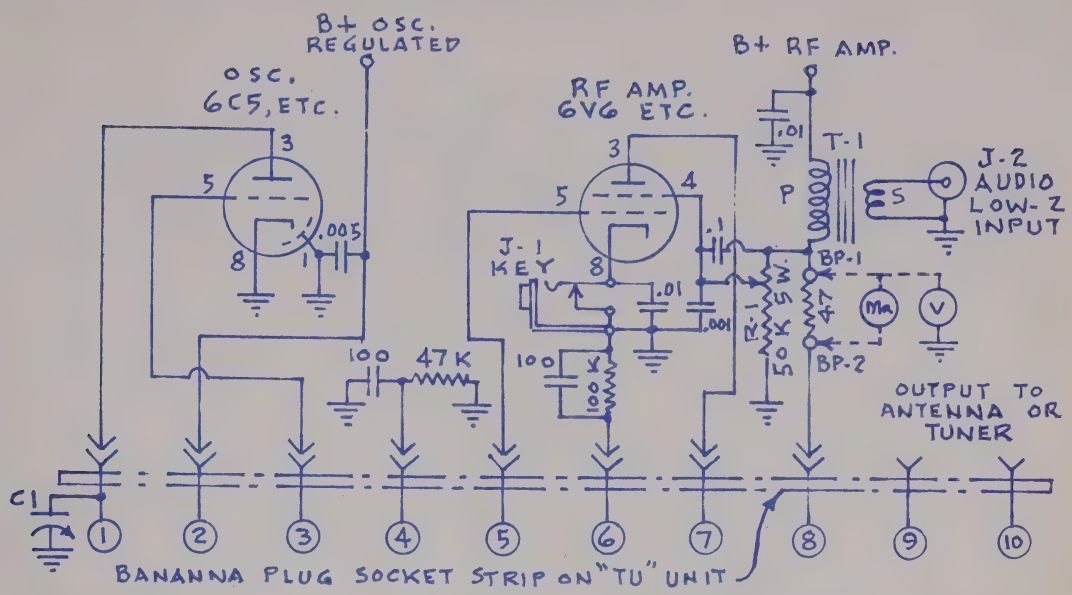

Fig. 39

The above tube-strip circuit will work with any "TU" unit....The connections for the socket strip are as follows;

1. Oscillator tube plate
2. B+ for oscillator
3. Oscillator tube grid
4. Oscillator grid bias
5. RF amplifier tube grid
6. RF amplifier grid bias
7. RF amplifier tube plate
8. B+ for rf amplifier
9 & 10 is the rf output to your antenna or antenna tuner.

Heater wiring is not shown and should be wired-up in normal fashion, pins 2 or 7 grounded and the other to 6.3 volts a.c.

Bandset condenser C1 is not required for the TU-5 unit, unless you want to work lower than 1500 kHz....I did require it for the TU-26. I used an Arco/Elmenco #424 (14 to 150 pf) and it made a snug fit between the front panel and the bananna plug strip. I wired it up between socket #1 and the stand-off stud at the end of the socket strip.

T-1 is a plate to voice coil output transformer. The voice coil winding is connected to phono jack J-2. Any small audio amplifier can be used for amplitude modulation.

Potentiometer R-1 is used to set your power input, and necessary meter readings can be taken from binding posts BP-1 and BP-2.

If Motorola HEP-802 fet's are used for the TU-5....The Gate goes to the Grid (pin 5), the Drain to Plate (pin 3) and the Source to Cathode (pin 8). Ignore screen connection....For CW, put the key in the B+ lea to the Drain, not in the Source to ground return....For voltage, do not exceed the ratings as specified for the fet.

160 to 190 kHz, cont'd. and 510 to 1600 kHz.

Due to the growing interest in low and medium frequencies by radio hams and experimenters alike, I decided to build a small, simple rig that would contain both a low and medium frequency transmitter on the same chassis, for demonstration purposes and to help a new-commer get started....Since I wanted a oscillator/rf amplifier combination, I decided to use the small dual type tubes (triode/pentode)....My junk box dictated that I use a 6EA8, or 6U8 for the MF rig, and a 6BA8 for the LF rig....After much bread-boarding, I ended up with the circuits shown in Fig. 40.

My friends idea on using a potentiometer between B+ and ground for the screen supply voltage (Fig. 34), reminded me of a modulation scheme that we used for AM back in the late 1930's....As I recall, it was suggested by Frank Jones, in the old "Radio Magazine"....The idea was to insert the secondary of your modulation transformer in the screen lead (using low level audio power), and obtain the screen voltage from an adjustable voltage divider or a potentiometer connected between B+ and ground....The lower the screen voltage, the lower the carrier level, yet the audio voltage would kick the screen voltage up as well as the plate power....I think it was called "controlled carrier modulation". With the screen voltage (without modulation) at or near zero level, the audio modulation provides a simple form of double sideband, suppressed carrier voice transmission. It can be easily copied with the receivers BFO on, and while the quality is not the best, it is intelligeable....I decided to incorporate this scheme in the transmitter.

Power distribution is common to both transmitters as well as the key jack J-3....Switch SW-1 in the heater circuits is used to activate the desired transmitter.

My best field strength readings using this transmitter was with high voltage and low current on the plate of the rf amplifier ....300 volts @ 3+ ma for LF and 50 volts @ 2 ma for MF.

Binding posts BP-1 and BP-2 are located in the screen voltage supply lead....For CW they can shorted together....For amplitude modulation, the modulation transformer is connected across same....This has to be a high impedance winding....In my case, I used a small plate to voice coil output transformer with the primary winding in the screen lead and feed my audio into the voice coil winding.

160 to 190 kHz, cont'd. and 510 to 1600 kHz.

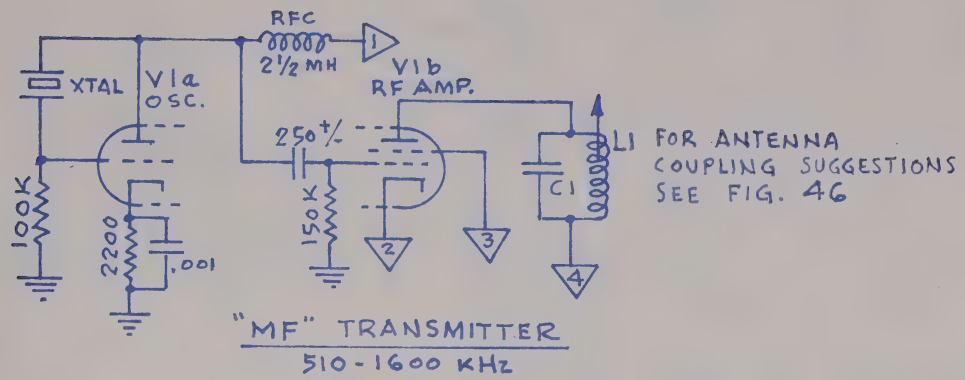

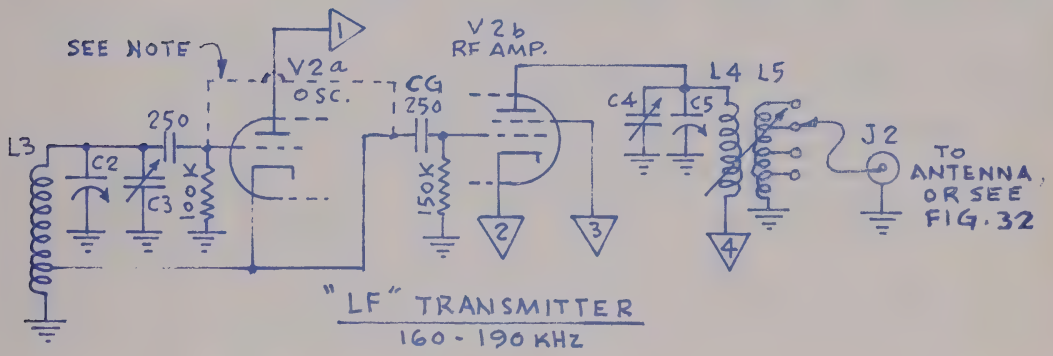

L1. Standard loop-stick
C1. 100 pf for 1500 to 1600 kHz. Increase capacity for lower end of band.
V1. 6EA8, 6U8A, etc.

L3, C2 & C3, as previously specified.
L4. 300 turns on 1" dia. pill bottle
L5. 200 turns on 1-1/4" dia. pill bottle
C4 & C5. Variable capacitor and a trimmer to make L4 resonant at desired frequency.
V2. 6BA8, etc.

Fig. 40

Fig. 41 shows a suggested chassis lay-out, heater switching, cathode keying and power distribution circuits.

I machine wound coils L4 & L5 on their pill bottle forms. Coil L5 has a tap every 50 turns....Hand or semi-machine wound coils can be used as previously described.

Note:- There are two means of coupling the oscillator to the grid of the rf amplifier in the LF transmitter. While I prefer taking same from the cathode, it can also be taken from the grid as shown in dotted lines. In any case, experiment with value of the grid coupling capacitor "CG" for best grid drive.

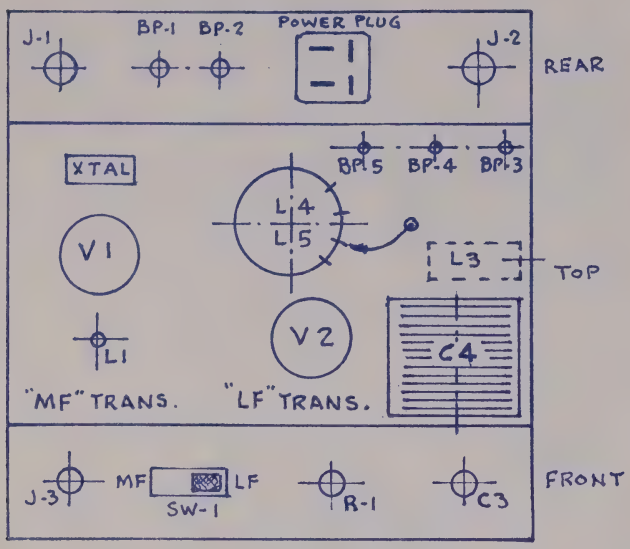

CHASSIS LAYOUT (5"x7"x2" ALUM.)

EXPANDED VIEW

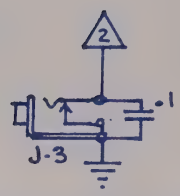

CATHODE KEY CIRCUIT

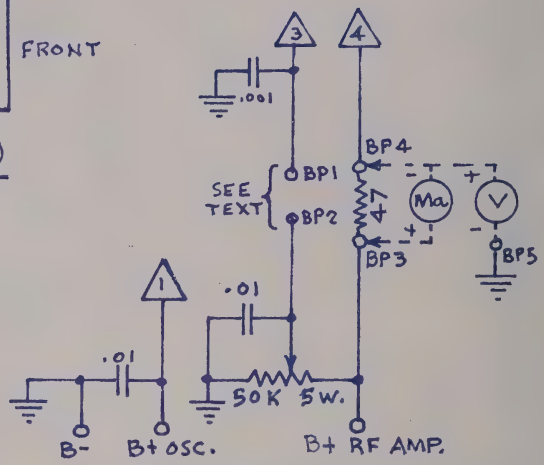

POWER DISTRIBUTION

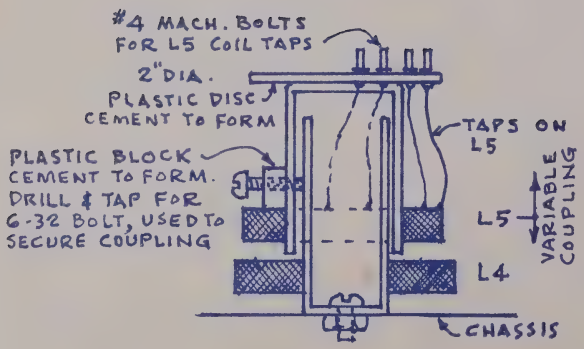

MOUNTING FOR COILS L4 & L5

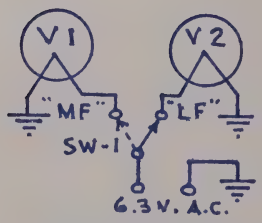

HEATER SWITCHING

Fig. 40 continued....Misc. details for control circuits, etc.

The nonlicensed communication bands

510 to 1600 kHz

The only other low frequency band that the FCC permits nonlicensed communications on, without field-strength restrictions, is the 510 to 1600 kHz range. In section 15, paragraph #15:204 (see appendix) they permit an input to the rf amplifier of 100 milliwatts and an antenna length of 10 feet, including a transmission line....This range of frequencies, of course, includes our AM broadcast band, and NO interference with same, is permissible....A 10 foot antenna is not too long, yet on 1600 kHz it is approximately 1/15th of a 1/4 wavelength, while on 190 kHz a 50 foot antenna is some 1/26th of a 1/4 wavelength.

The high end of this band is only 200 kHz lower than the amateur radio 160 meter band (1800 kHz), and it is a known fact that many contacts on 160 meters have been made with low power (QRP) and portable and mobile operation.

I recommend that any experimenter wishing to communicate on this band, concentrate on the high end. This is due to the antenna length vs. wave length ratio. At 510 kHz, a 10 foot antenna is 1/49th of a 1/4 wave, yet on 1600 kHz it is a 1/15th of a 1/4 wave.

Broadcast stations in this range, are separated by even multiples of 10 kHz, yet in many localities and depending on the time of day, you may find some 20 to 30 kHz between same.....For operation on this band, I suggest crystal control....Any crystals purchased should have the last number in frequency, end with a "5", NOT a "0"....My two favorite frequencies are 1575 and 1585 kHz.

Receivers for this range should be no problem as there are few households or cars that don't contain same. A beat frequency oscillator will be required however, to receive CW or suppressed carrier voice transmissions....There are also many good communications receivers that cover this band.

It is of interest to note that radio frequency interference as to reception is no-wheres as bad in this range as it is on 160 to 190 kHz.

Here again, we have no restrictions on a receiving antenna, and as repeated before, the best antenna is the one that will give you the best signal to noise ratio....I suggest however, that a loop antenna be seriously considered for reception....They are not too cumbersome for these frequencies, and can be rotated to favor the wanted signal and attenuate an interfering signal or noise source....See the antenna chapter for guidance.

I bread-boarded a simple transmitter that could use crystal or VFO control. It uses a 6AG7 oscillator and a 6Y6 or 6V6 rf amplifier. (It might sound ludicrous to use a tube in the rf amplifier capable of many watts input, yet I was surprised at how effecient they are with only some 25 volts +/- plate voltage)...See Fig.41.

I also used the same circuit substituting fet's (Motorola HEP-802) and used adapter sockets, with good success....See Fig. 42.

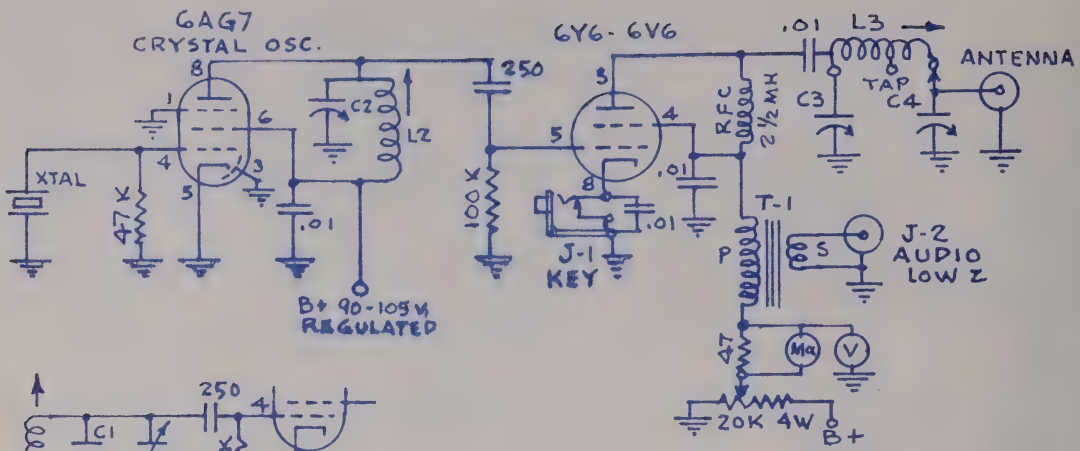

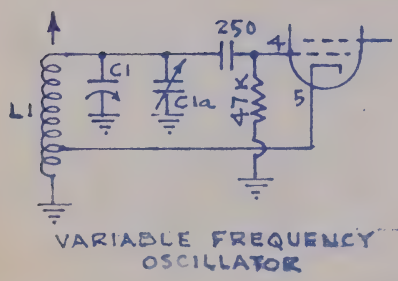

L1, L2, L3. Standard loop-stick with tap. Tap not required for L2.
C1, C1a. C1 band-set 365 pf trimmer. C1a fine tune, 30 pf variable.
C3, C4. 170 to 780 pf trimmers.
T1. Output transformer, plate to voice coil.

Fig. 41

This simple transmitter can use either crystal or VFO control. It has a pi-network output to feed an antenna, or other coupling circuits can be used....Amplitude modulation can be introduced at jack J-2, from the voice coil output from a low power audio amplifier.

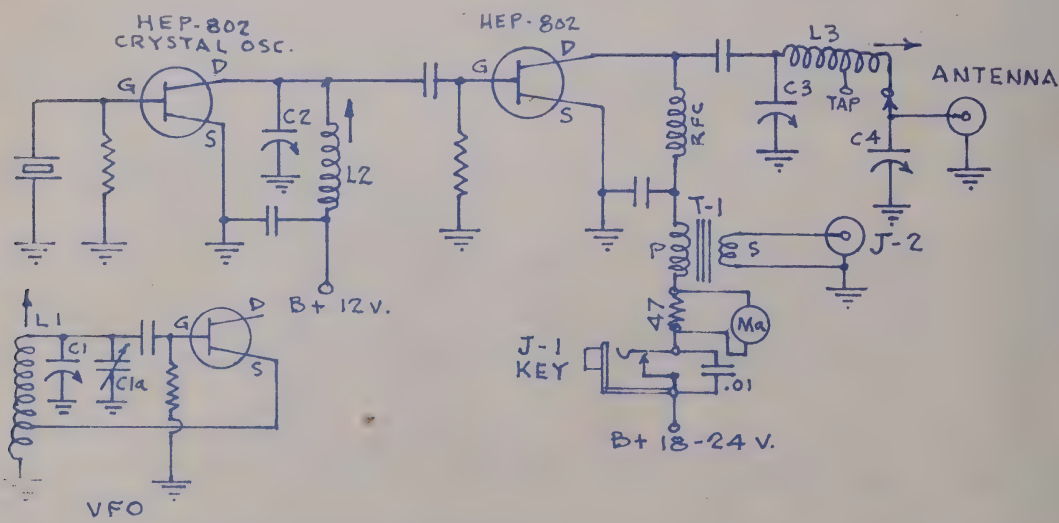

Fig. 42

This transmitter is the same as Fig. 41, as to circuit and part values. The only change is that solid-state fet's have been substituted for the tubes....The only major change is that the key jack is now located in the drain lead.

I use the Motorola HEP-802 in many circuits described in this scrapbook. It is a silicon N-channel field effect transistor....Unlike the bi-polar types, it is a high impedance device similar to a vacuum tube, and in many cases can be substituted for a tube with no change in circuit component values.

One of our experimenters, Pete Cranwell (WA2EIN) developed a simple bi-polar transistor transmitter using crystal control. We lived about 3/4 mile apart, at the time, and we had many CW contacts on 1575 kHz. Fig. 43 below, is the circuit.

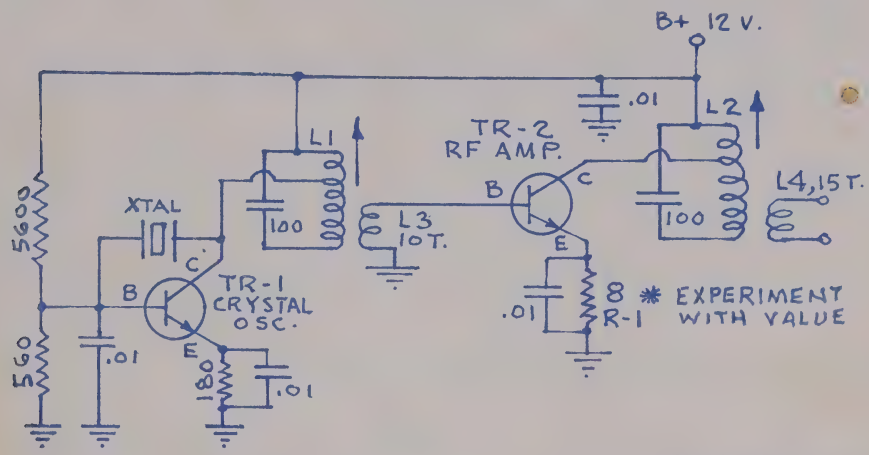

L1, L2. Standard loop-stick with tap.

Fig. 43

An antenna tuner is used between the output coil L4 and the antenna base.

Coils L3 and L4 are wound over the cold ends of coils L1 and L2 with insulated wire.

While NPN transistors are shown, a PNP can be used by reversing the polarity of the supply voltage.

In the original circuit, a high frequency transistor was used for the rf amplifier and television interference was noticed. A low frequency audio type transistor was substituted and the interference disappeared.

Keying can be accomplished in the B+ feed to the collector of TR-2.

Modulation for AM can be introduced at the same point.

Constructing an efficient 10 foot antenna for these frequencies can be an interesting project....Our experience on 160 to 190 kHz, as well as using short antennas for mobile use on the amateur radio bands, indicate that the short antenna should look like a 1/4 wave at the operating frequency....As an example, a resonant 1/4 wave antenna for 1575 kHz would be some 150 feet long....Since we are limited to 10 feet we will have to use other means to make the antenna part of a resonant radiating system, such as base loading, or center loading or distributed loading, such as a helical winding, or a combination of all.

Fig. 44 illustrates three typical antenna configurations.

Type 1, is a continuous metal whip or tube. This will require base loading.
Type 2, uses two lengths of metal tube. They are joined at the center with a length of insulating material that holds a loading coil.
Type 3, uses a length of insulating material. This can be a wood pole or better yet, a length of rigid plastic or fiberglas tube or pipe. The antenna wire is wound on same in a wide spaced fashion. I suggest a minimum of 1/4" between turns....A rule-of-thumb for the length of wire required in a helical wound antenna is twice the length that a normal antenna would require. This means that we would need some 300 feet of wire....Since we are limited to 10 feet, we will have to break the continuity of the helical winding at the center and add a loading coil to achieve resonance.

The addition of a top capacity hat for all types, will improve their radiating effeciency (particularly types 2 & 3).

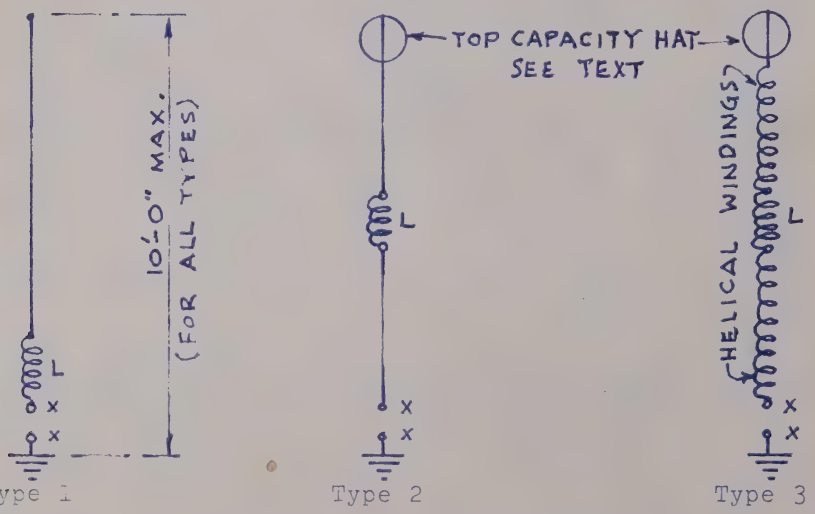

Note:- In all types coil "L" is the loading coil.
Transmitter output is fed at points X-X. See Fig. 46 for suggested circuits.

Fig. 44

A suggested construction for the top capacity hat, is to form two loops of heavy wire or small diameter copper tubing some 18" to 24" in diameter. Attach these to a suitable coupling or adapter in "egg beater" fashion that can be attached to the top of the antenna.

Regardless of which scheme is used, the loading coil is the secret of success....This will determine the resonant frequency of the vertical antenna too its ground system....We now have to determine the necessary inductance we will require for this coil....This can be done in several ways....The easiest way is to use a grid-dip meter....A loop of wire consisting of several turns is connected between the antenna and its ground at points X-X....The loading coil is now connected to the antenna, in its proper location, and the system is checked-out for resonance....I suggest using a coil of the same form that you intend to use for the final loading coil, and wind 120 turns of wire on same, tapped every 10 turns for the first 50 turns....By tapping the various turns, and grid-dipping same, you will arrive at a "target" figure for your finished loading coil.

The other scheme for obtaining resonance, is to follow the same proceedure, only you have to use a field-strength meter to obtain best radiation.

For experimenters that don't own or can't borrow a grid-dip meter, they are simple to construct....See Fig. 45.

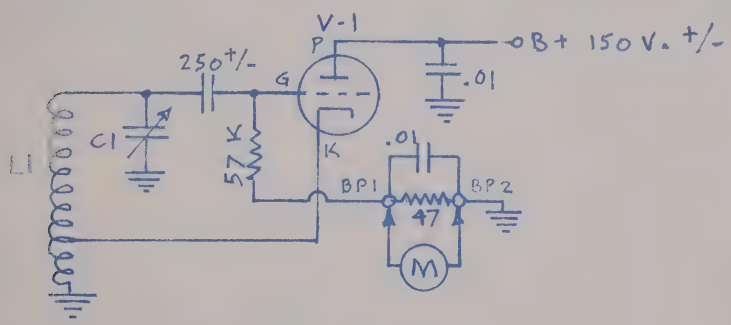

Fig. 45

V-1 can be any type of triode vacuum tube (a pentode can be used and short the screen to plate).
L1 is the grid-dip coil and it consists of 65 turns of #28 +/- wire wound on a 1-1/4" diameter form....C1 is a 365 pf variable capacitor. A one milliammeter is connected across BP1 & BP2 to register grid current....When a questionable tuned circuit is coupled to coil L1 and when tuned to the same frequency, it will absorb power from the tuned circuit L1/C1, and this will cause the grid current to fall, thus the name "grid-dip meter"....Plug-in coils for L1 can be used and it is useable on other frequencies....Reasonable calibration for the grid-dip meter is required. (It is nothing more than a low-powered variable frequency oscillator).

For successful operation, it is MOST important that we obtain an efficient transfer of rf energy from the rf amplifier tank circuit into the antenna....There are three ways that we can accomplish this.

One is capacity coupling. As mentioned before, this is not recommended as the antenna can radiate any harmonics that are generated in the rf amplifier tank circuit....The second method is inductive coupling. In this case the transmitter tank coil is coupled to the antenna base loading coil, and should be the most efficient, though it requires the transmitter to be located at the antenna base....The third scheme is to use link coupling. In this case, a mirror-image of the transmitter tank circuit is located at the antenna base, and the link connection can be made using taps on the two circuits or using secondary coils consisting of a few turns to provide coupling....Since we are using two resonant circuits on the fundamental frequency, this method is helpful in attenuating harmonics....Fig. 46 illustrates these three schemes.

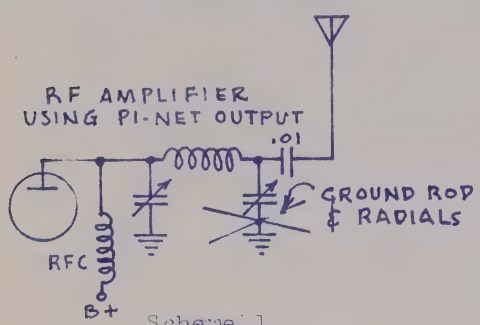

Scheme 1

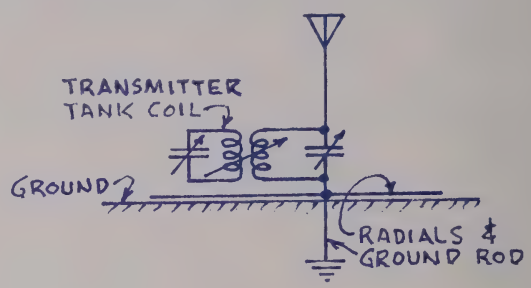

Scheme 2

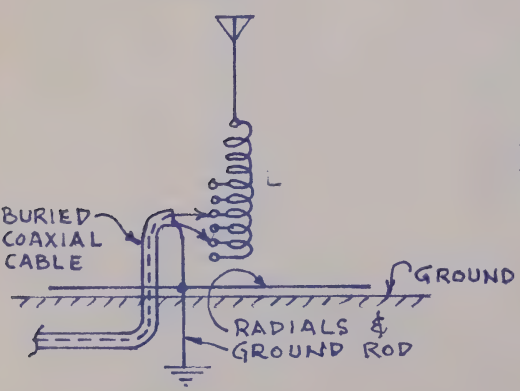

Scheme 3
Link coupling using tapped coil
I used a basket weave coil of 60 turns on a 2-3/8" dia, peg circle and tapped same every 5 turns for 40 turns.

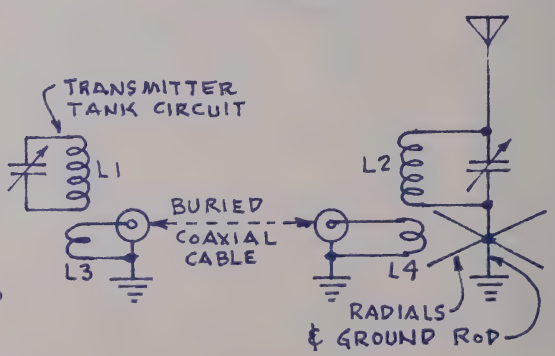

Scheme 3 (alt.)
Link coupling using secondary coils. L3 & L4 are 4 or 5 turns of insulated wire wound on the cold ends of coils L1 & L2.

Fig. 46

I should note at this point, that most radio amateurs and experimenters are high frequency oriented, and the minute you mention a 10 foot whip antenna, the thought is to put it as high as possible....In this case, we are dealing with the lower frequencies, and for transmitting purposes, it is important that the short antenna work with a GOOD ground system.

Since we are dealing with very low power requirements, necessary power to a transmitter located at the base of a remote located antenna can be provided through a multi-conductor cable....This will permit the necessary power supply, key, modulator and controls to be located in the shack....Even #18 copper wire has only a resistance of .065 ohms in 100 feet....If tubes are used in the transmitter using a.c. on the heaters, it is suggested that a piece of coaxial cable, with the shield grounded, be used for supplying heater voltage to reduce the chance of 60 hertz hum pick-up in the other power wiring.

When using CW (hand key or beacon) on this band, be sure to check for key-clicks....This can be very annoying to a neighbor that is listening to their favorite program....This is easy to check using your own broadcast set and your car radio....If key-clicks are present, you should use a filter for your keying circuit....This can consist of a fairly high value rf choke in series with the key, and also by-passing the key itself with a capacitor of experimental value (try .1 mfd) to start with.

To conclude this chapter, DO NOT ABUSE THE PRIVELEDGE....Be sure to digest the text of the FCC rules on these contained in the extracts of Sect. 15 that is included in the appendix of this scrap-book.

ADDENDUM

As in any experimental hobby, something new and interesting "pops up" from time-to-time.....This addendum includes some items of interest that I forgot to include in the original manuscript, or that have come to my attention after finishing same....I feel that they are of sufficient interest to be included herein.

Power mains filter

As mentioned before, man-made noise plagues the lower frequency radio spectrum...If its elecro-magnetic radiation (radio), the size, type and location of your antenna to provide the best signal-to-noise ratio is most important....If it is coming in on your power lines, then an effective filter at the power mains input to your residence will help.

One of our Low-fers developed a simple and effective filter using only three capacitors....See Fig. 47.

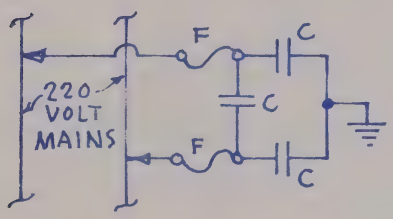

F. 1 ampere fuses

C. .5 mf capacitors. DO NOT USE the polarized types (electrolytic), and the d.c. rating should be 600 volts MINIMUM.

Fig. 47

Audio filter

Jim Hagan (WA4GHK), developed a simple, yet very selective audio filter that many Low-fers are using....It has to be tried, to be appreciated....See Fig. 48.

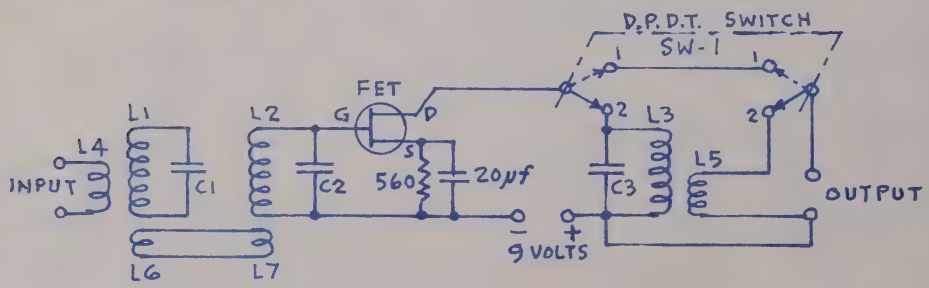

L1, L2 and L3 are 88 mh toroids that are common items on the surplus market.

C1, C2 and C3 are .5 mfd. capacitors. It is suggested that these be as close to tolerance as possible.

L4 is 6 turns of insulated wire wound on L1.

L5 is 30 turns of insulated wire wound on L3

Fig. 48, description cont'd. on next page.

Addendum, cont'd.

Coils L6 and L7 are one turn of wire wound on toroids L1 and L2 and connected together as a link coupling....It might sound ludicrous at audio frequencies, to only use a one turn link coupling between two resonant circuits, and while they might contribute to a fairly high insertion loss for the filter, they do contribute to its extreme sharpness....DO NOT ADD ADDITIONAL TURNS to negate the insertion loss.

The field effect transistor (FET) can be most any type. Jim uses a IRC-FE-100, but I have tried the Motorola HEP-801 and 802 with excellent results....One of our experimenters advised me that he substituted a triode vacuum tube for the FET, again with excellent results.

Jim estimates that his filter peaks at about 780 cps and is flat over 10 cps....It is minus 7 db @ 30 cps and 48 db @ 200 cps.

The input coil L4 is designed to take the low impedance output from your receiver voice coil (4 to 6 ohm)....If you don't have a low impedance output from your receiver, use a suitable matching transformer to suit your receiver output to the 4 to 6 ohm input on the filter.

Any earphones or transformer used on the output of the filter should not have an impedance of less than 600 ohms. 8 ohm earphones will work but will load the last tuned circuit so much that the filter is noticeably broader.

Switch SW-1 is used to by-pass the last tuned circuit (L3 & C3). The output in position 1 is broad, and position 2 is sharp....Due to the extreme sharpness of the filter, it is suggested that the filter be used in broad position for general tuning and in sharp position only when required.

Do not overdrive the filter as harmonics of the audio signal will be generated and the filter will then accept signals having fundamentals of 1/2, 1/3, 1/4 etc. of 780 hz....Low level also helps decrease ringing.

For a "perfect" filter, all tuned circuits should be resonant on the same frequency....Due variations in the toroid inductances and the capity of the condensers, this may not be the case....Jim uses a audio oscillator and a VTVM to check each tuned circuit....By swapping capacitors and adding or removing turns on the toroids, this is accomplished....In my case, I used the toroids "as-is" and used .49 mf +/- 1% capacitors, and ended up with a very effective filter.

For practical use of my filter, I had a two-fold problem....When used in the shack, a tube would be preferred over the FET. Yet with my portable receiver, the FET is required....I ended up with an octal socket and used a 6C5 tube for shack location. I also mounted my FET to an octal plug that provides a simple substitution for portable use. A simple plug arrangement was used to suit power requirements.

Magnetic tuning for toroid coils

Experimenters should not overlook an article that appeared in the November 1974 issue of Ham Radio Magazine. It was written by OH2KT and described a low frequency converter that used a toroid coil that was tuned by using magnets....The toroid is sandwiched between two circular

magnets. One magnet is fixed and the other is arranged so that it is manually rotateable....Circular shaped magnets that have their poles opposite to each other on the periphery, should be used.

Since the ferrite material of the toroid core is in the magnetic field, by rotating the fields, the permeability of the core is changed, which in turn changes the inductance of the coil....The author claims an inductance variation of 120 : 1.

This scheme should be most applicable for use in most any type of rf or audio band-pass, etc. type of filters and experimentation should be encouraged.

The Edmund Scientific Co., 300 Edscorp Bldg., Barrington, N.J. 08007 list many magnets in their catalog that should be useable.

The Ferranti ZN414

The June 1974 issue of Popular Electronics magazine contained two articles concerning the use of the Ferranti ZN414 in receiving circuits for low and medium frequency use.....While a tuned front-end circuit and a few external parts are required, it contains the equal of a ten transistor TRF receiver in a three lead TO-18 case that measures about 1/8" in diameter by 3/16" high....The output is earphone volumn using 1-1/2 volt battery.

Its frequency range is listed at 150 to 3000 kHz, with a current consumption of less than 1/2 ma....Power gain of 72 db, or more are also claimed.

While this unit operates remarkably as a straight-forward TRF receiver, it could also be used as an IF amplifier for a superheterodyne type of receiver with a converter....It is designed for AM reception, but I was able to obtain regeneration by using the ground return as a loose link to the tuned input circuit. This means for copying CW or SSB voice reception, was far from being a suitable method....I ended up using an external VFO tuned to the desired received signal frequency to obtain a beat-note (a signal generator works fine).

Specifications and suggested circuits for the ZN414 can be obtained from Ferranti Electric Inc., East Bethpage Road, Plainview, N.Y. 11803.

IC transmitter for 160 to 190 kHz

Joe Bauer (W2WQ) developed an interesting LF transmitter that uses a 7473 IC....It uses higher frequency crystals that are twice or four times as high as the fundamental output frequency (in other words, it will divide the crystal frequency by two or four)....Crystals in this range are very cheap on the surplus market.

This transmitter is obviously quite effecient, as it has been copied at ranges of +/- 100 miles.

See Fig. 49 for a schematic of the transmitter.

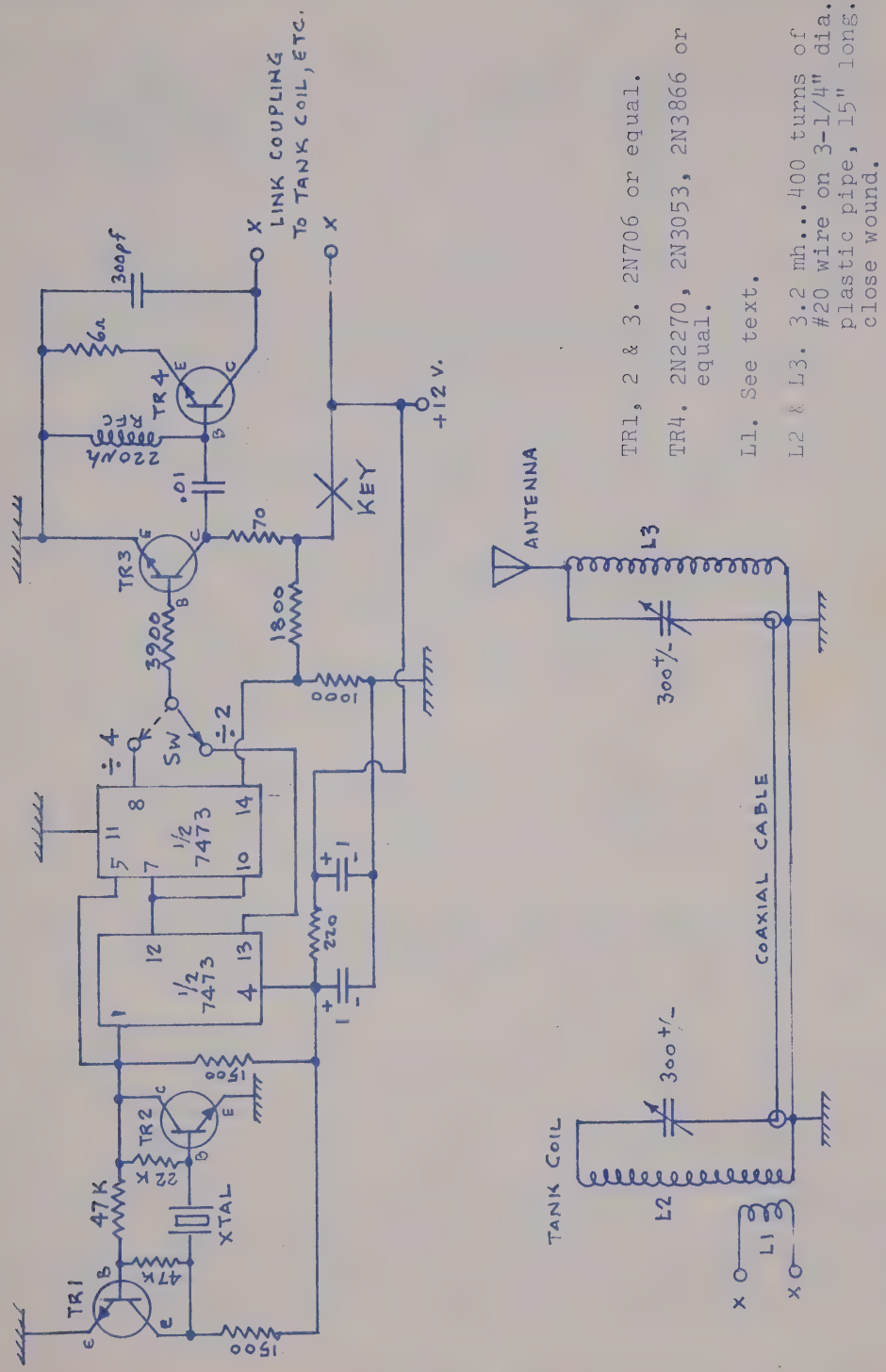

TR1, 2 & 3. 2N706 or equal.

TR4. 2N2270, 2N3053, 2N3866 or equal.

L1. See text.

L2 & L3. 3.2 mh...400 turns of #20 wire on 3-1/4" dia. plastic pipe, 15" long. close wound.

Fig. 49

The use of a link coupling between the rf amplifier (TR4) collector to the tank circuit is unique as this is normally accomplished with a tap near the ground end of L2....At low frequencies however, it is easier to fool around with a few turns of wire wound on the ground end of L2, than to provide a bunch of taps @ 1 turn each to suit the rf amplifier in a 400 turn coil....Experiment with L1 for best performance of the rf amplifier.

The single pole double throw switch (SW) will select the desired division of the crystal (Xtal) frequency....In one position, it will use 1/2 of the 7473 IC and divide by 2, in the other position it will divide by 4....In other words, in the divide by two position, you would need a crystal with a fundamental frequency of 320 to 380 kHz. In the divide by four position, you would need a crystal 640 to 760 kHz.

There are a series of surplus crystals available on the market that can be used in this transmitter from various suppliers at very reasonable prices. They are low frequency fundamental types and are mounted in a FT-241 holder.....They are normally listed by channel numbers and the following can be used for guidance:-

Channel No.	Fundamental Freq. kHz	Divide by 2 frequency
0	370.370	185.185
1	372.222	186.111
2	374.074	187.037
270	375.000	187.500
3	375.926	187.963
271	376.388	188.194
272	377.777	188.888
4	377.778	188.889
273	379.166	189.583
5	379.630	189.815

Conclusion

The Long Wave Club of America (LWCA) was formed in January 1974. They have over 100 members and is growing fast....They issue a monthly bulletin called the LOWDOWN that contains listeners reports, items of interest, Low-Fers activities, etc.

They also plan to publish station lists, and other booklets concerning this phase of the hobby.

A library is being planned to contain (or list the availability) of various instruction manuals for low frequency equipment.

For up-to-date information on the club, send a SASE to John Clements, 11425 Albers #5, North Hollywood, CA 91601.

The Federal Communications Commission, Washington, D.C. 20554, has an information bulletin available at no charge, that lists the sources of various radio station listings. My copy is #4-G dated 11/71.

FEDERAL COMMUNICATIONS COMMISSION
OFFICE OF THE CHIEF ENGINEER
Washington, D.C. 20554

BULLETIN OCE 11
July 1973

Supersedes Issue
of March 1972

DOES MY TRANSMITTER NEED A LICENSE?

Increasing quantities and varieties of miniature transmitters, characterized by small size, light weight and low power are being offered to the public. As a consequence, the question is frequently asked:

"Do I need a license for this transmitter? It uses so little power."

The answer depends on many conditions. This bulletin explains when a license is required and when a transmitter may be operated without a license.

ELECTROMAGNETIC COMPATIBILITY: When a radio transmitter is operated, RF energy is emitted into the surrounding space. This energy may cause interference. To avoid causing interference, the equipment must be carefully designed, the frequency must be carefully selected, and the transmitter must be operated under suitable safeguards. The condition under which a generator of RF energy-- be it transmitter or other device-- can operate in the vicinity of other radio equipment without upsetting or interfering with the radio operations of its neighbors is called Electromagnetic Compatibility.

The operation of noncompatible apparatus may cause interference to radio and TV receivers, or may interfere with other radio systems as aviation radio employed for the safety of life and property. Interference may be merely of the nuisance type when it temporarily disturbs a TV picture. Or it may be extremely serious when it interferes with aviation communications, radionavigation, or instrument landing systems.

The FCC has promulgated rules and regulations governing the use of radio to promote electromagnetic compatibility. Except as provided by Part 15 of the Commission's Regulations, a radio station license must be obtained before a transmitter may be operated.

EAVESDROPPING PROHIBITED: FCC Rules adopted in 1966 prohibit the use of any radio transmitter for eavesdropping, whether licensed or operated without a license under Part 15. See Appendix B, §§2.701 and 15.11. This prohibition does not apply to law enforcement officers operating under lawful authority.

CITIZENS RADIO SERVICE: Low power transmitters may be operated under a license in the Citizens Radio Service (FCC Rules Part 95) for personal or business communications (short distance only) subject to the limitations in Part 95. A Citizens Radio Station, or any unit thereof, may communicate only with other units of the same station or with units of another Citizens Radio Station.

The 27 MHz band in the Citizens Radio Service is limited to use for the remote control of objects or devices by radio (Class C stations) or for voice communications (Class D stations). Frequencies in the 460-470 MHz band are also available for the above uses by Class A or Class B stations, but are subject to different limitations.

SS Bulletin No. 1001 (available upon request) and FCC Rules Part 95 contain detailed information concerning licensing procedure, technical requirements and permissible communications.

OTHER LICENSED OPERATION: Low power transmitters may be licensed under other Parts of the FCC Rules when the equipment is to be used for communications in a specific activity to which the regulations apply. See Parts 81 and 83 for licensing in the Marine Services; Part 87 for use and licensing in the Aviation Services; Part 89 for licensing in police, fire, and related fields in Public Safety Services; Part 91 for licensing in an industrial or business enterprise; Part 93 for licensing in land transportation activities; and Part 21 for licensing in the Domestic Public Radio Services.

Equipment used under these Parts must generally be type accepted for licensing. Type acceptance of equipment is based on representations and test data submitted to the Commission by the manufacturer or the prospective licensee. The lists of type accepted equipment are revised periodically, and are available for inspection at the Commission's offices in Washington, D.C., and at each of its field offices. Procedure for type acceptance of equipment is contained in Subpart F of Part 2 of the Commission's Rules.

NONLICENSED OPERATION: Subpart E of Part 15, LOW POWER COMMUNICATION DEVICES, provides for operation without a license of devices such as wireless microphones, phonograph oscillators, telemetering transmitters, radio garage door controls, and other similar miniature transmitters. Operation without a license is subject to these three general conditions:

1. That no harmful interference is caused to licensed operations.

2. That the transmitter complies with the technical specifications in Subpart E of Part 15.

3. That the device is tagged with a label certifying that it complies with these requirements.

Note that only certain frequencies may be used. These frequencies are listed in §15.201. Note also the list of prohibited frequencies in §15.215. Other sections of these rules list the maximum signal level that may be emitted or the maximum power and antenna length that may be used. See rules in the Appendix.

There are no restrictions on the type of modulation that may be used or on frequency stability. Care must be taken, however, that the signals transmitted by the device stay within the designated band. The device may be used for any legitimate endeavor. An operator's permit is not required for operation of a low power communication device. Call letters are not assigned for use of low power communication devices; they are assigned to licensed stations only.

A certifying label attesting that the transmitter complies with Part 15 must be attached to each low power communication device before operation is permissible. Conscientious and informed manufacturers normally test prototype transmitters for compliance with Part 15 and attach labels to devices offered for sale. Purchasers of low power transmitters intended for operation without a license under Part 15 should make sure that the devices which they purchase carry the manufacturer's certifying label.

WIRELESS MICROPHONE: A wireless microphone is a low power communication device that contains a microphone (an electro-acoustic transducer for converting sound waves into corresponding electric current or voltage variations), a transmitter modulated by the microphone, and a radiating element. The modulated output of the wireless microphone is fed into its associated amplifier by electromagnetic radiation instead of wires.

A magnetic pick-up or the pick-up on a record player is not considered to be a microphone.

(a) Licensed Use: Various Commission Rules make provision for licensed use of wireless microphones. A lecturer, square dance caller or entertainer may apply for a license under Subpart L of Part 91 if he meets the eligibility requirements in the Business Radio Service. A person eligible in the Motion Picture Radio Service may apply for a license under Subpart I of Part 91. Wireless microphones used by AM, FM and TV broadcast stations may be licensed under §74.437 of Part 74.

(b) Nonlicensed Use: For operation without a license, the wireless microphone must meet the technical provisions of Subpart E of Part 15. The pertinent regulations of Part 15 are reprinted at the back of this bulletin. See §15.201 for the frequencies that may be used and §§15.202 through 15.238 for other requirements. If the microphone operates in the FM band 88-108 MHz, it must be type approved (§§15.212(f), 15.235). If it operates on other frequencies permitted by Subpart E, it must be certificated (§§15.227, 15.228.) Regardless of which frequency is used, if the wireless microphone causes harmful interference to a licensed radio service, the operation of the wireless microphone must be stopped and may not be resumed until the harmful interference has been eliminated (§15.3, 15.4, 15.222).

TELEMETERING TRANSMITTER: Another use for low power transmitters is in telemetering. This is a form of communication in which information collected by various sensing devices is transmitted to a nearby receiver-recorder. Telemetering transmitters are generally used in places where it is impossible or very costly to connect the sensing device to the recorder by cable or where the connecting wires would constitute a hazard. In industry, for example, telemetering transmitters have been used to record the readings of strain gauges attached to the rotors of large machines. In medical research, they have been used to record physiological data--heart action, blood pressure, respiratory rate, body temperature--of human and animal subjects while in motion.

(a) Licensed Use: Eligible applicants may apply for a license to operate a telemetering station under the Rules governing an established radio service, such as Industrial, Public Safety, etc.

(b) Experimental Operation: To the extent that telemetering is used in an experimental or research project as in medical research, a telemetering transmitter may be licensed in the Experimental Research Service under §5.201 of Part 5 for "communications in connection with research projects when existing communications facilities are inadequate" A station in the Experimental Research Service may be assigned frequencies allocated to the broadcast service, the fixed service, or the land mobile service on a noninterference basis. See FCC Rules Part 5 (Volume II) for the license application procedure.

(c) Nonlicensed Operation: Telemetering transmitters may be operated without a license in the same manner as wireless microphones with the exception permitted by §15.213.

RADIO CONTROL FOR GARAGE DOOR OPENER: One way of opening a garage door without getting out of the automobile is to use a radio control activated motor to open the door. The transmitter, in the car, is designed to emit a short RF pulse which is coded with one or more tones. Coding is used to provide a degree of security and to minimize interference to other controls in the vicinity.

(a) Licensed Use: The transmitter may be licensed as a Class C Citizens Radio Station for operation on specified frequencies in the 27 MHz band. Ask for SS Bulletin No. 1001 for details of such operation.

(b) Nonlicensed Use: The radio control for a garage door opener may be operated without a license pursuant to the provisions of Subpart E of Part 15. See §§15.201 through 15.238. If the radio control operates above 70 MHz, no radiation, either from the transmitter or receiver part of the control, may fall in the prohibited frequency bands listed in §15.215. The transmitter part of the radio control must be certificated pursuant to §§15.260-15.276. The receiver part of the radio control shall be separately certificated pursuant to Subpart C of this part. Just as with other devices operated pursuant to Part 15, if the radio control causes harmful interference, its operation must be stopped and may not be resumed until the harmful interference has been eliminated (§§15.3, 15.4, 15.222).

FIELD DISTURBANCE SENSOR: A field disturbance sensor is a restricted radiation device which establishes a radio frequency field in its vicinity and detects changes in that field resulting from movement of persons or objects within the radio frequency field.

(a) Licensed Use: Eligible applicants may apply for a license to operate this type of radio frequency security device in the Public Safety Radio Services (Part 89), Industrial Radio Services (Part 91) and/or the Land Transportation Radio Services (Part 93).

(b) Unlicensed Use: A field disturbance sensor may be operated without an individual license pursuant to the sections of Subpart F of Part 15, pertaining to the permitted bands of operation, general technical specifications, emission limitations and certification requirements.

RECEIVER ASSOCIATED WITH MINIATURE TRANSMITTER: In addition to interference which may be caused by transmitters, interference may also result from receiver oscillator radiation. Harmful interference from radio receivers is just as real and just as damaging as harmful interference from transmitters. Receivers associated with miniature transmitters must also comply with FCC Rules (Subpart C, Part 15). If the receiver operates in the range 30-890 MHz it must bear a seal certifying that it complies with the FCC Rules.

AVAILABILITY OF RULES: The various Rules and Regulations of the FCC may be purchased from the Government Printing Office, Washington, D. C. 20402, at the prices shown in Appendix A. Purchase of a volume carries with it a subscription for amendments for the life of the volume.

1-A

Volumes of FCC Rules and Regulations by Categories - Available on subscription basis from Superintendent of Documents, U.S. Government Printing Office, Washington, D.C. 20402. Subscription price is for an indefinite period and includes basic volume plus all amendments to be mailed to subscribers by the Superintendent of Documents when issued. Parts will not be sold separately, nor can they be supplied by the Commission. Domestic subscription includes U.S. Territories, Canada and Mexico. Do not send orders to the Federal Communications Commission.

Volume II (Sept. 1972) Price $7.00 ($8.75 foreign)

Part 2, Frequency Allocations and Radio Treaty Matters: General Rules and Regulations
Part 5, Experimental Radio Services (other than Broadcast)
Part 15, Radio Frequency Devices
Part 18, Industrial, Scientific, and Medical Equipment

Volume III (Sept. 1972) Price $18.50 ($23.25 foreign)

Part 73, Radio Broadcast Services
Part 74, Experimental, Auxiliary and Special Broadcast, and other Program Distributional Services
Part 76, Cable Television Service
Part 78, Cable Television Relay Service

Volume IV (Dec. 1971) Price $9.50 ($12.00 foreign)

Part 81, Stations on Land in Maritime Services and Alaska-Public Fixed Stations
Part 83, Stations on Shipboard in the Maritime Services

Volume V (Jan. 1970) Price $12.50 ($15.75 foreign)

Part 87, Aviation Services
Part 89, Public Safety Radio Services
Part 91, Industrial Radio Services
Part 93, Land Transportation Radio Services

Volume VI (Jan. 1972) Price $3.50 ($4.50 foreign)

Part 95, Citizens Radio Service
Part 97, Amateur Radio
Part 99, Disaster Communications Service

Volume VII (Sept. 1970) Price $6.00 ($7.50 foreign)

Part 21, Domestic Public Radio Services (Other than Maritime Mobile)
Part 23, International Fixed Public Radiocommunication Services
Part 25, Satellite Communications

---

§ 15.3 General condition of operation.

Persons operating restricted or incidental radiation devices shall not be deemed to have any vested or recognizable right to the continued use of any given frequency, by virtue of prior registration or certification of equipment. Operation of these devices is subject to the conditions that no harmful interference is caused and that interference must be accepted that may be caused by other incidental or restricted radiation devices, industrial, scientific or medical equipment, or from any authorized radio service.

§ 15.4 General definitions.

(a) *Radio frequency energy.* Electromagnetic energy at any frequency in the radio spectrum between 10 kHz and 3,000,000 MHz.

(b) *Harmful interference.* Any emission, radiation or induction which endangers the functioning of a radionavigation service or of other safety services or seriously degrades, obstructs or repeatedly interrupts a radiocommunication service operating in accordance with this chapter.

(c) *Incidental radiation device.* A device that radiates radio frequency energy during the course of its operation although the device is not intentionally designed to generate radio frequency energy.

(d) *Restricted radiation device.* A device in which the generation of radio frequency energy is intentionally incorporated into the design and in which the radio frequency energy is conducted along wires or is radiated, exclusive of transmitters which require licensing under other parts of this chapter and exclusive of devices in which the radio frequency energy is used to produce physical, chemical or biological effects in materials and which are regulated under the provisions of Part 18 of this chapter.

(e) *Community antenna television system.* A restricted radiation device designed and used for the purpose of distributing television signals by means of conducted or guided radio frequency currents to a multiplicity of receivers outside the confines of a single building.

NOTE: The television signals that are distributed are modulated radio frequency signals and may be:

(a) Broadcast signals that have been received and amplified.

(b) Broadcast signals that have been received and converted to another frequency.

(c) Any other modulated radio frequency signals fed into the system.

(f) *Low power communication device.* A low power communication device is a restricted radiation device, exclusive of those employing conducted or guided radio frequency techniques, used for the transmission of signs, signals (including control signals), writing, images and sounds or intelligence of any nature by radiation of electromagnetic energy.

EXAMPLES: Wireless microphone, phonograph oscillator, radio controlled garage door opener and radio controlled models.

§ 15.11 Prohibition against eavesdropping.

(a) No person shall use, either directly or indirectly, a device operated pursuant to the provisions of this part for the purpose of overhearing or recording the private conversations of others unless such use is authorized by all of the parties engaging in the conversation.

(b) Paragraph (a) of this section shall not apply to operations of any law enforcement officers conducted under lawful authority.

§ 15.63 Radiation interference limits.

(a) The radiation from all radio receivers that operate (tune) in the range 30 to 890 MHz, including frequency modulation broadcast receivers and television broadcast receivers, manufactured after the effective date specified in § 15.72 shall not exceed the following field strength limits at a distance of 100 feet or more from the receiver:

Frequency of radiation (MHz)	Field strength (uV/m)
0.45 up to and including 25	See paragraph (b).
Over 25 up to and including 70	32.
Over 70 up to and including 130	50.
130-174	50-150 (linear interpolation)
174-260	150.
260-470	150-500 (linear interpolation)
470-1000	500 (see paragraph (c) below

(b) Pending the development of suitable measurement techniques for measuring the actual radiation in the band 0.45 to 25 MHz, the interference capabilities of a receiver in this band will be determined by the measurement of radio frequency voltage between each power line and ground at the power terminals of the receiver. This requirement applies only to radio receivers intended to be connected to power lines of public utility systems. For television broadcast receivers the voltage so measured shall not exceed 100 uV at any frequency between 450 kHz and 25 MHz inclusive. For all other receivers the voltage shall not exceed 100 uV at any frequency between 450 kHz and 9 MHz inclusive, 1000 uV for frequencies between 10 MHz and 25 MHz and linear increase from 100 uV to 1000 uV for frequencies between 9 MHz and 10 MHz.

(c) For television broadcast receivers the limit in the band 470–1000 MHz shall be 350 μV/m, compliance being determined as follows:

(1) Measurements shall be made at the following 10 frequencies in the band 470–1000 MHz.

MHz	*MHz*	*MHz*
520	700	850
550	750	900
600	800	931
650		

NOTE: If measurements cannot be made on one or more of the frequencies listed because of the presence of signals from licensed radio stations, measurements should be made on a nearby frequency. The report should indicate the actual frequency(ies) on which measurements were made.

(2) The average of the 10 measurements shall not exceed 350 μV/m.

(3) No measurement shall exceed 750 μV/m.

(d) Notwithstanding the provisions of paragraph (a) of this section and subject to the prohibition against emissions on the frequencies listed in § 15.215(c), the level of emission of RF energy from the receiver used with a radio control for a door opener shall not exceed the values listed below when measured in accordance with the procedures laid down in FCC Technical Division Report, T-7001, dated October 1, 1970.

Frequency (MHz)	Field strength at 100 ft. (μV/m)
Over 25 up to and including 70	32.
Over 70 up to and including 200	50.
200–1,500	50–500 (liner variation).
Over 1,500	500.

[*§ 15.63(d) added eff. 5-7-71, this date later stayed to 11-1-71; II(69)-71*]

SUBPART E—LOW POWER COMMUNICATION DEVICES

§ 15.201 Frequencies of operation.

(a) A low power communication device may be operated on any frequency in the bands 10–490 kHz, 510–1600 kHz and 26.97–27.27 MHz.

(b) Other frequencies above 70 MHz may be used for operations of short duration in accordance with the requirements set forth in § 15.211.

(c) Telemetering devices and wireless microphones may be operated in the band 88–108 MHz in accordance with the provisions of § 15.212.

(d) A low power communication device used for measurement of the characteristics of materials may be operated on frequencies and under the alternative provisions listed in § 15.214.

§ 15.202 Radiation limitation below 1600 kHz.

A low power communication device which operates on any frequency between 10 and 490 kHz or between 510 and 1600 kHz shall limit the radiation so that the field strength does not exceed the value specified in the following table:

Frequency kHz	Distance (feet)	Field strength (μV/m)
10–490	1,000	$\frac{2400}{F(kHz)}$
510–1600	100	$\frac{24000}{F(kHz)}$

§ 15.203 Alternative requirement for operation on frequencies between 160 and 190 kHz.

In lieu of meeting the radiation limitation, stated in § 15.202, a low power communication device operating on a frequency between 160 and 190 kHz need only meet the following requirements:

(a) The power input to the final radio frequency stage (exclusive of filament or heater power) does not exceed one watt.

(b) All emissions below 160 kHz or above 190 kHz are suppressed 20 dB or more below the unmodulated carrier.

(c) The total length of the transmission line plus the antenna does not exceed 50 feet.

§ 15.204 Alternative requirement for operation on frequencies between 510 and 1600 kHz.

In lieu of meeting the radiation limitation stated in § 15.202, a low power communication device operating on a frequency between 510 and 1600 kHz inclusive need only meet the following requirements:

(a) The power input to the final radio stage (exclusive of filament or heater power) does not exceed 100 milliwatts.

(b) The emissions below 510 kHz or above 1600 kHz are suppressed 20 dB or more below the unmodulated carrier.

(c) The total length of the transmission line plus the antenna does not exceed 10 feet.

(d) Low power communication devices obtaining their power from the lines of public utility systems shall limit the radio frequency voltage appearing on each power line to 200 microvolts or less on any frequency from 510 kHz to 1600 kHz. Measurements shall be made from each power line to ground both with the equipment grounded and with the equipment ungrounded.

NOTE: One method of determining radio frequency voltage on the power line is described in "Military Specification for Interference Measurement" MIL-I-16910 (SHIPS) dated January 14, 1952, available from the Commanding Officer, Naval Supply Depot, Scotia, New York, 12302. Note that this procedure calls for grounding the equipment under test, whereas the Commission's rules call for measurements both with the equipment grounded and with the equipment ungrounded.

§ 15.205 Operation within the frequency band 26.97–27.27 MHz.

A low power communication device may operate within the band 26.97–27.27 MHz (27.12 MHz±150 kHz) provided it complies with all of the following requirements:

(a) The carrier of the device shall be maintained within the band 26.97–27.27 MHz.

(b) All emissions, including modulation products, below 26.97 MHz or above 27.27 MHz shall be suppressed 20 dB or more below the unmodulated carrier.

(c) The power input to the final radio stage (exclusive of filament or heater power) shall not exceed 100 milliwatts.

(d) The antenna shall consist of a single element that does not exceed 5 feet in length.

§ 15.211 Operation above 70 MHz.

(a) Except for telemetering devices and wireless microphones operated in accordance with §§ 15.212 and 15.213, and radio controls for door openers operating in accordance with § 15.215, a low power communication device manufactured on or after July 15, 1963, may be operated on frequencies above 70 MHz, provided it complies with all of the following conditions:

(1) The radiated field on any frequency from 70 MHz up to and including 1000 MHz does not exceed the limits specified for receivers in § 15.63.

(2) The radiated field on any frequency above 1000 MHz does not exceed 500 microvolts per meter at a distance of 100 feet.

(3) The device is provided with means for automatically limiting operation so that the duration of each transmission shall not be greater than 1 second and the silent period between transmissions shall not be less than 30 seconds.

(4) The device shall be so constructed that there are no external or readily accessible controls which may be adjusted to permit operation in a manner inconsistent with the provisions of this paragraph.

(b) Except for radio controls for door openers and for telemetering devices and wireless microphones operated in accordance with the requirements of §§ 15.212 and 15.213, a low power communications device, manufactured before July 15, 1963, may be operated on any frequency above 70 MHz: *Provided*, it complies with all of the following conditions:

(1) The radiated field on any frequency from 70 MHz up to and including 1000 MHz does not exceed the limits specified for receivers in § 15.63.

(2) The radiated field on any frequency above 1000 MHz does not exceed 500 microvolts per meter at a distance of 100 feet.

(3) The device is provided with means for automatically limiting operation to a duration of not more than 1 second, not to occur more than once in 30 seconds.

[*§ 15.211(a) amended, par (5) & (6) deleted eff. 5-7-71, this date later stayed to 11-1-71; II(69)-7*]

§ 15.212 Telemetering devices and wireless microphones in the band 88–108 MHz.

(a) Operation in the band 88–108 MHz is limited to low power communication devices employed as telemetering devices or as wireless microphones. This band shall not be used for two way communication.

(b) Users of these devices shall take adequate precautions to insure that harmful interference is not caused to the reception of transmissions from any FM or television broadcast station or any other class of station licensed by the Commission. In the event that such interference does occur, operation of the telemetering device or wireless microphone shall be promptly suspended and shall not be resumed until the interference has been eliminated. Users of these devices must accept any interference which may be caused by the operation of any licensed station operating in accordance with the terms of its license.

(c) Emissions from the device shall be confined within a band 200 kHz wide centered on the operating frequency. Such 200 kHz band shall lie wholly within the frequency range 88–108 MHz.

(d) The field strength of emissions radiated within the specified 200 kHz band shall not exceed 50 μV/m at a distance of 50 feet or more from the device.

(e) The field strength of emissions radiated on any frequency outside the specified 200 kHz band shall not exceed 40 μV/m at a distance of 10 feet or more from the device.

(f) Except as provided in § 15.213, no such device shall be operated unless it has been type approved pursuant to § 15.235.

(g) No antenna other than that furnished by the manufacturer shall be used with any type approved device.

§ 15.213 Custom built telemetering devices.

Custom built telemetering devices used for experimentation by an educational institution need not be type approved, *Provided:*

(a) The device complies with the technical requirements of § 15.212;

(b) The device has been certificated pursuant to §§ 15.227 and 15.228; and

(c) The educational institution notifies the Engineer in Charge of the local FCC office, in writing, in advance of operation. The notice shall include:

(1) The dates and place where the device will be operated;

(2) The purpose for which the device will be used;

(3) A description of the device including the operating frequency, RF power output, and antenna; and

(4) A statement certifying that the device complies with the technical provisions of § 15.212.

§ 15.214 Alternative provisions for measuring devices.

(a) A low power communication device used for measurement of the characteristics of materials may operate in the frequency bands listed in paragraph (c) pursuant to the provisions in this section.

(b) A device operated pursuant to the alternative provisions of this section may not be used for voice communications, or the transmission of any other type message.

(c) The device shall operate within the frequency bands:

MHz	*MHz*
13.554–13.566	890–940
26.96–27.28	(See note)
40.66–40.70	2400–2500
	5725–5875
	22000–22250

NOTE: The frequency band 890–940 MHz is subject to change pursuant to the reallocation of frequencies that may be made in the band 806–960 MHz in the rule making proceeding in Docket No. 18262.

(d) The maximum level of emission from the device shall not exceed:

Fundamental frequency in the band	Emission (μv/m at 100 feet)		
	On fundamental frequency	On harmonic frequencies	On other frequencies
13.554–13.566 MHz	15	0.5	0.5
26.96–27.28 MHz	32	1.0	1.0
40.66–40.70 MHz	50	1.5	1.5
above 890 MHz	500	50.0	15.0

(e) The device shall be self-contained with no external or readily accessible controls which may be adjusted to permit operation in a manner inconsistent with the provisions of this section. Any antenna that may be used with the device shall be permanently attached thereto and shall not be readily modifiable by the user.

(f) The device shall be prototype certificated pursuant to §§ 15.251–15.254 inclusive.

§ 15.215 Provisions for a radio control transmitter for a door opener.

(a) A low power communication device used for the radio control of a door opener may operate on any frequency above 70 MHz subject to the provisions of this section.

(b) The device may be used only for the purposes of opening or closing a door and may not be used for voice transmission or the transmission of any other type of message.

(c) Emission of RF energy from the transmitter, as well as from the receiver part of the control, shall not fall within any of the bands listed below:

MHz	MHz	GHz
73–75.4	608–614	10.68–10.70
108–118	960–1215	15.35–15.4
121.4–121.6	1400–1427	19.3–19.4
242.8–243.2	1535–1670	31.3–31.5
265–285	2690–2700	88–90
328.6–335.4	4200–4400	
404–406	4990–5250	

(d) Subject to the limitation in paragraph (c) of this section, emission of RF energy from the transmitter shall not exceed the levels given below when measured under open field conditions as prescribed in FCC Technical Division Report T-7001 dated October 1, 1970.

Frequency (MHz)	Field strength at 100 ft. (μV/m)
70–130	125.
130–174	125–375 (linear variation).
174–260	375.
260–470	375–1250 (linear variation).
Over 470	1250.

(e) The transmitter part of the control shall be activated only by a switch which will automatically deactivate the transmitter when released. The switch shall be of such quality to insure reliable operation for the expected life of the transmitter.

(f) The transmitter part of the radio control must be certificated pursuant to §§ 15.260–15.266.

(g) The receiver part of the radio control shall be separately certificated pursuant to Subpart C of this part.

[*§ 15.215 added eff. 5-7-71, this date later stayed to 11-1-71; 11(69)-7*]

§ 15.220 Eavesdropping prohibited.

As provided in § 15.11, the use of a low power communication device for eavesdropping is prohibited.

§ 15.221 Class B emission prohibited.

Operation of low power communication devices that produce Class B emissions (damped waves) is prohibited

§ 15.222 Interference from low power communication devices.

Notwithstanding the other requirements of this part, the operator of a low power communication device, regardless of date of manufacture, which causes harmful interference to an authorized radio service, shall promptly stop operating the device until the harmful interference has been eliminated.

§ 15.227 Certification requirements.

(a) Except for telemetering devices and wireless microphones which have been type approved pursuant to § 15.235, no low power communication device manufactured after the dates set forth in § 15.229 shall be operated without a station license unless it has been certificated to demonstrate compliance with the requirements in this part.

(b) The owner or operator need not certificate his own low power communication device, if it has been certificated by the manufacturer or distributor.

(c) Where certification is based on measurement of a prototype, a sufficient number of units shall be tested to assure that all production units comply with the technical requirements of this subpart.

(d) The certificate may be executed by a technician skilled in making and interpreting the measurements that are required to assure compliance with the requirements of this part.

(e) The certificate shall contain the following information:

(1) The operating conditions under which the device is intended to be used.

(2) The antenna to be used with the device.

(3) A statement certifying that the device can be expected to comply with the requirements of this subpart under the operating conditions specified in the certificate.

(4) The month and year in which the device was manufactured.

§ 15.228 Location of certificate.

The certificate shall be permanently attached to the device and shall be readily visible for inspection.

§ 15.229 Date when certification is required.

All low power communication devices which operate on frequencies of 70 MHz or above, manufactured after June 30, 1958, shall comply with the type approval or certification requirements of this subpart. All low power communication devices which operate on frequencies below 70 MHz, manufactured after December 31, 1957, shall comply with the certification requirements of this subpart.

§ 15.235 Type approval.

(a) A manufacturer of a telemetering device or wireless microphone who desires to obtain type approval for his equipment may request permission to submit such equipment to the Commission for testing by following the procedure set out in Subpart F of Part 2 of this chapter, as modified by this section. The manufacturer shall furnish the following with his request for type approval:

(1) A report of measurements showing that the equipment is capable of complying with the requirements of § 15.212;

(2) A statement that at least 10 units are proposed to be manufactured; and

(3) A statement agreeing to include a reprint of Subparts A and E of this Part 15, current as of date of manufacture, with each unit offered for sale or resale to the public.

(b) To receive type approval, telemetering devices and wireless microphones must meet the following requirements:

(1) The device must comply with the technical limitations of § 15.212.

(2) The design and construction of the equipment must give reasonable assurance of compliance with the requirements of § 15.212 for at least 5 years under normal operation and with average maintenance.

(3) The device must be so constructed that the adjustment of any control accessible to the user shall not cause operation in violation of § 15.212.

§ 15.236 Identification of type approved devices.

The Commission will assign a type approval number to each telemetering device or wireless microphone

AUTHORS NOTE:- Type approval is difficult to apply in the case of of a home-made transmitter. It is suggested that certification requirements as outlined in #15.227, paragraphs (d) and (e) be followed. In any case, proper metering and monitoring devices should be available to insure proper operation at all times.

which is type approved. The type approval number and the following statement shall be permanently inscribed upon or permanently attached to each production unit as follows:

FCC Type Approval No. ----------

Valid only when operated pursuant to FCC Rules, Part 15, and when used with antenna furnished by manufacturer

§ 15.237 Changes in type approved equipment.

No changes whatsoever may be made in a type approved telemetering device or wireless microphone, including the antenna, except on specific prior approval by the Commission.

§ 15.238 Withdrawal of certificate of type approval.

(a) A certificate of type approval may be withdrawn if the type of equipment for which it was issued proves defective in service and, under usual conditions of maintenance and operation, such equipment cannot be relied on to meet the conditions set forth in this part for the operation of the type of equipment involved, or if any change whatsoever is made in the construction of equipment sold under the certificate of type approval issued by the Commission, without the specific prior approval of the Commission.

(b) The procedure for withdrawal of the certificate of type approval shall be the same as that prescribed for revocation of a radio station license pursuant to the provisions of the Communications Act of 1934, as amended.

(c) In the case of withdrawal of a certificate of type approval, the manufacturer shall make no further sale of equipment under such certificate.

(d) When a certificate of type approval has been withdrawn for unauthorized changes or for failure to comply with technical requirements, the Commission will consider that fact in determining whether the manufacturer in question is eligible to receive any new certificate of type approval.

§ 15.251 Certification of measuring device operating pursuant to § 15.214.

(a) A device operating pursuant to § 15.214 need not be certificated by the owner or user if the device has been certificated by the manufacturer.

(b) Where certification is based on measurement of a prototype, a sufficient number of units shall be tested to insure that all production units can be reasonably expected to comply with the applicable technical requirements.

(c) The certificate shall be filed with the FCC, Washington, D.C. 20554.

(d) The certificate filed by the manufacturer will be available for public inspection pursuant to the provisions of §§ 0.457 and 0.461 of this chapter.

§ 15.252 Content of certificate required by § 15.214.

(a) The manufacturer, model, and serial number(s) or other positive identification of the device that was tested.

(b) Photographs of the device.

(c) A description of the circuitry and how the device operates.

(d) The conditions under which the device shall be operated.

(e) The antenna, if any, to be used with the device.

(f) A report of measurements pursuant to § 15.253.

(g) If filed by manufacturer, a statement certifying that production will be adequately controlled to insure that all units produced can be reasonably expected to comply with the applicable technical requirements.

(h) If filed by manufacturer, a copy of the installation and operating instructions provided to the user.

(i) Date of certificate.

(j) Signature. If filed by the manufacturer, the certificate shall be signed by a responsible official, who shall state that he is authorized to sign for the manufacturer and shall indicate his title.

§ 15.253 Report of measurements for a device operating pursuant to § 15.214.

The report of measurements may be prepared by any engineer skilled in making and interpreting the measurements that are required and shall contain the following information.

(a) Identification of the device(s) tested.

(b) List of measuring equipment used showing manufacturer, model number and date when last calibrated.

(c) Description of measurement procedure used. If a published standard was followed, reference to the standard is sufficient, provided any departure from such standard is described in detail.

(d) Report of the measurements obtained on the fundamental, and on harmonic and other spurious signals emitted by the device. For this measurement,

the frequency spectrum shall be scanned from the lowest frequency generated by the device to the 10th harmonic of the operating frequency.

(e) Representative calculations used to determine field strength from the actual meter reading indicating the conversion factors used and their source.

(f) The date the measurements were made.

(g) The name and address of the engineer or technician who made the actual measurements, and the name and address of his employer, if any.

(h) The signature and printed name and address of the engineer responsible for the report.

§ 15.254 Identification of a device certificated under § 15.214.

(a) Each device certificated under § 15.214 shall be identified by a label which may be part of the nameplate.

(b) The label shall state that a certificate has been filed with the Commission attesting compliance with the applicable technical requirements.

(c) The label shall state further:

Operation of this equipment is subject to the following two conditions: 1. This equipment may not cause harmful interference. 2. This equipment must accept any interference that may be received, including interference that may cause undesired operation.

(d) The label shall be permanently attached to the device and shall be readily visible by prospective purchasers.

(e) The label may be attached only after the certificate required by § 15.214 has been filed with the Commission.

§ 15.260 Application for certification of a radio control transmitter for a door opener.

The application for certification of a radio control transmitter for a door opener shall contain the following information.

(a) The full name of the applicant.

(b) Mailing address.

(c) Name and title of responsible individual to be contacted for information concerning the application.

(d) Trade name(s) under which the device will be sold.

(e) Model number (or other positive identification) of each of the receiver and transmitter parts of the device.

(f) An expository statement describing how the device operates. This statement should include a block diagram, a circuit diagram, a description of the circuitry in the device, and a description of the antenna used with the device.

(g) Photographs of the device: Such photographs shall be 8'' x 10'', and shall clearly show the construction and circuit layout of the device. At least one exterior view shall be furnished showing the antenna and the controls available to the user. A sufficient number of views of the interior shall be furnished to define component placement and chassis assembly.

(h) A description of the installation and operating conditions that must be observed to insure the device will comply with the requirements of this part.

(i) A report of measurements pursuant to §§ 15.264–15.266.

(j) A copy of the installation and operating instructions furnished to the user. A draft copy of such instructions may be submitted with the application, provided a copy of the actual document to be furnished to the user is submitted within 45 days after certification is granted.

§ 15.262 Who may sign the application.

Each application, including amendments thereto, and related statements of fact required by the Commission, shall be personally signed by the applicant if the applicant is an individual; by one of the partners if the applicant is a partnership; by an officer if the applicant is a corporation; or by a member who is an officer if the applicant is an unincorporated association: *Provided, however,* That it will be sufficient if the application is signed by the head of an entity's engineering, technical, production, etc., department, with an indication of that representative's title, such as plant manager, etc.

§ 15.264 Report of measurements for certification of a radio control transmitter for a door opener.

The report of measurements shall be personally signed by the person who performed or supervised the tests who shall attest to the accuracy of the data and shall attach a brief statement of his qualifications. The report shall include the following information for both the transmitter and receiver parts of the device:

(a) Identification of the unit that was tested. Give name of manufacturer, model number, serial number,

(d) The latest calibration date of the measuring equipment and the standard against which such equipment was calibrated.

(e) A tabulation of the data that was obtained. The data shall show the actual meter reading, the computed value of the field strength, and shall include representative calculations showing how the field strength was determined from the meter source of such factor.

(f) A graphical display of the data. This may be a polar plot of field strength measured around the device.

(g) Date the measurements were made.

§ 15.266 Frequency range of transmitter measurements.

For devices operating below 500 MHz, the spectrum shall be scanned from the lowest frequency generated in the device up to 1000 MHz. For equipments operating on 500 MHz or higher, the spectrum shall be scanned from the lowest frequency generated in the device to 10 GHz. Measurements shall be made of all significant emissions observed. Emissions more than 20 dB below the permitted level need not be reported.

§ 15.268 Identification of a certificated radio control for a door opener.

(a) Irrespective of operating frequency, and notwithstanding the other labeling requirements of this chapter, each transmitter unit and each receiver unit of a radio control for a door opener shall be identified by an appropriate label containing the following information:

(1) The name of the grantee of certification or the trade name specified in the application for certification.

(2) The model number as given in the application for certification.

(3) The following statement:

This device complies with FCC Rules Part 15. Operation of this device is subject to the following two conditions: 1. This device may not cause harmful interference. 2. This device must accept any interference that may be received, including interference that may cause undesired operation.

(b) The information required by paragraph (a) of this section shall be permanently attached to the device and be readily visible to the prospective purchaser and user.

§ 15.270 Changes in a certificated radio control for a door opener.

No changes may be made in a certificated radio control for a door opener which alter the characteristics of the device that are required to be reported. If such changes are made, a new application for certification shall be filed.

§ 15.272 FCC Inspection.

Upon the request of the Commission, each grantee of certification shall be required, where practicable, to permit inspection of:

(a) Any device for which certification has been granted;

(b) The grantee's quality control procedures, inspection, and test data, and materials, and testing devices;

(c) The manufacturing plant and facilities; and

(d) The technical data files on that article.

§ 15.274 Interference from a radio control for a door opener.

(a) Operation of a radio control for a door opener is subject to the general conditions of operation set out in §§ 15.3 and 15.222.

(b) The operator of a radio control for a door opener who is advised that his device is causing harmful interference to an authorized radio service shall promptly stop operating the device, and he shall not resume operation until the condition causing the harmful interference has been eliminated.

[*§§ 15.260–15.274 added eff. 5–7–71; § 15.268 amended and eff. date stayed to 11–1–71; II(69–7)*]

§ 15.276 Date when certification of a radio control for a door opener is required.

(a) A radio control for a door opener that operates above 70 MHz marketed on or after November 1, 1971, shall comply with the certification requirements of § 15.215 and §§ 15.260–15.266 inclusive.

(b) No radio control for a door opener that operates above 70 MHz marketed prior to November 1, 1971, may operate after October 1, 1978, or such earlier date that may be specified by the Commission if the receiver thereof is found to be a source of harmful interference, unless the receiver has been certificated to demonstrate compliance with the provisions of § 15.63(d) and the transmitter has been certificated to demonstrate compliance with the provisions of § 15.215.

[*§ 15.276 added eff. 11–1–71; II(69)–7*]

Subpart F—Field Disturbance Sensors

[*Subpart F (§§ 15.301–15.317) added eff. 10–5–71; II(69)–8*]

§ 15.301 Scope of this subpart.

This subpart provides rules governing the operation of restricted radiation devices which are used as field disturbance sensors. Typical examples of devices regulated by these rules are microwave intrusion sensors and devices that use RF energy for production line counting and sensing.

§ 15.303 Restriction on operation.

No field disturbance sensor may be operated unless it has been certificated and labeled as complying with the requirements of this part.

§ 15.305 General technical specification.

(a) A field disturbance sensor may be operated on any frequency (including frequencies above 900 MHz) subject to the requirement that the field strength of emissions on the fundamental or on a harmonic or on other spurious frequencies shall not exceed 15 uV/m at a distance of $\lambda/2\pi$ from the sensor.

NOTE: The distance $\lambda/2\pi$ is equivalent in feet to 157 divided by the frequency in MHz.

(b) Alternative to paragraph (a) of this section, a field disturbance sensor may be operated on any frequency listed below, subject to the technical requirements set out in §§ 15.307 and 15.309 of this part.

915 MHz	10,525 MHz
2450 MHz	22,125 MHz
5800 MHz	

§ 15.307 Permitted bands of operation.

The carrier frequency of a field disturbance sensor operating on one of the frequencies listed in § 15.305(b) and any modulation components thereof shall be kept within the following band limits:

Nominal operating frequency (MHz)	*Band Limits (MHz)*
915	±13
2450	±15
5800	±15
10,525	±25
22,125	±50

NOTE: To minimize the possibility of out-of-band operation because of frequency drift due to aging of components or other causes, it is recommended that the carrier frequency be kept within the central 80 percent of the permitted band.

§ 15.309 Emission limitations.

(a) For a field disturbance sensor operating within any frequency band listed in § 15.307, the field strength of emissions on the fundamental shall be limited in accordance with the following:

Frequency (MHz)	*Field Strength*
915, 2450, 5800	50,000 uV/m at 100 ft.
10,525, 22,125	250,000 uV/m at 100 ft.

(b) Spurious emissions (including emissions on a harmonic of any frequency listed in paragraph (a) of this section) shall be suppressed at least 50 dB below the level of the fundamental; however, suppression below 15 uV/m at 100 ft. is not required.

NOTE: For pulsed operation, measured field strength shall be determined from the averaged absolute voltage during a 0.1 second interval when field strength is at its maximum value. Below 1000 MHz, the measurement bandwidth shall comply with the requirements set out in the American National Standards Institute Specifications C63.2–1963 and C63.3–1964. Above 1000 MHz the measurement bandwidth shall be 5 MHz.

§ 15.311 Interference from a field disturbance sensor.

(a) Operation of a field disturbance sensor is subject to the general conditions of operation set out in § 15.3.

(b) The operator of a field disturbance sensor who is advised that his sensor is causing interference to an authorized radio service shall promptly stop operating the sensor, and operation shall not be resumed until the condition causing the harmful interference has been eliminated.

§ 15.313 Certification of a field disturbance sensor.

The procedure for certification of a field disturbance sensor is identical to the procedure for a radio control for a door opener as set out in §§ 15.260–15.264 inclusive, and §§ 15.268–15.272 inclusive, except that § 15.264(b) shall not apply.

§ 15.315 Description of measurement procedure.

The report of measurements shall describe in detail the measurement procedure that was used. If a published standard was used, reference to the standard is sufficient, provided any departure from the standard is described in detail.

§ 15.317 Frequency range over which measurements are required.

(a) For a field disturbance sensor operating below 100 MHz, the spectrum shall be scanned from the lowest frequency generated in the device up to 1000 MHz. Field strength for all significant emissions shall be measured and reported.

(b) For a field disturbance sensor operating above 100 MHz the spectrum shall be scanned from the lowest frequency generated in the device up to 10 GHz, provided that for sensors operating on frequencies above 5 GHz, the spectrum shall be scanned to the highest frequency feasible, above 10 GHz. Field strengths of all significant emissions shall be measured and reported.

[*Subpart F (§§ 15.301–15.317) added eff. 10–5–71; II(69)-8*]